# SERVICE MANUAL

## EZ-2000 SERIES

## THERMAL TRANSFER PRINTER

# CONTENTS

## Chapter 1

1.1 FCC REPORT ..... 3
1.2 CE REPORT ..... 4
1.3 UL REPORT ..... 5
1.4 TÜV/GS CERTIFICATE ..... 6
1.5 TÜV/CB PEPORT ..... 7
1.6 CCC CERTIFICATE ..... 8
1.7 BSMI ROPORT ..... 9
1.8 BSMI CERTIFICATE ..... 10

## Chapter 2

2.1 EZ-2200/EZ-2300 PROGRAMMER'S MANUAL ..... 11
2.2 EZ-2200/EZ-2300 USER MANUAL ..... 32
2.3 EZ-2000 TPH PREESSURE ADJUSTMENT ..... 65

## Chapter 3

3.1 EXDLODE DIAGRAM ..... 66
3.1.1 EZ-2100 FINISHED UNIT ..... 66
3.1.2 EZ-2200 FINISHED UNIT ..... 69
3.1.3 EZ-2300 FINISHED UNIT ..... 72
3.1.4 EZ-2100/2200 MECHANISM ..... 75
3.1.5 EZ-2300 MECHANISM ..... 78
3.1.6 EZ-2100/2200/2300 RIBBON MIDULE ..... 81
3.2 SOP SPART LIS ..... 83
3.3 SCHEMATICS LIST ..... 104
3.3.1 MAIN BOARD ..... 104
3.3.2 PRINT HEAD ..... 105
3.3.3 MOTOR ..... 106
3.3.4 CONNECTERS ..... 107
3.3.5 POWER 1 ..... 108
3.3.6 POWER 2 ..... 109
3.3.7 PORTS 1 ..... 110
3.3.8 PORTS 2 ..... 111

**1.1 FCC REPORT**

**SPORTON INTERNATIONAL INC.**

SPORTON LAB.

NVLAP

*FCC TEST REPORT* **Report No. : F292303**

Certificate No. : F292303

# CERTIFICATE OF COMPLIANCE

**for**

**47 CFR, Part 2, Part 15 and CISPR PUB. 22 Class A**

Equipment : Bar code printer

Model No. : EZ-2XXXYYY (X=0~9, Y=0~9, A~Z, BLANK)

FCC ID : N/A

Applicant : **GODEX INTERNATIONAL CO., LTD.**
5F-2, NO. 168, LIAN-CHENG ROAD, CHUNG-HO CITY,
TAIPEI HSIEN, TAIWAN, R.O.C.

I **HEREBY** CERTIFY THAT :

The measurements shown in this test report were made in accordance with the procedures given in **ANSI C63.4 - 1992** and the energy emitted by this equipment was ***passed*** **CISPR PUB. 22 and FCC Part 15 in** both radiated and conducted emission class A limits. Testing was carried out on Oct. 25, 2002 at **SPORTON International Inc.** LAB.

K. J. Lin Nov. 09, 2002

K. J. Lin
Manager

***SPORTON International Inc.***

6F, No.106, Sec. 1, Hsin Tai Wu Rd., Hsi Chih, Taipei Hsien, Taiwan, R.O.C.

**1.2 CE REPORT**

**SPORTON INTERNATIONAL INC.**

SPORTON LAB.

NVLAP

CE *CE TEST REPORT*

**Report No. : C292303**

Certificate No. : C292303

# CERTIFICATE OF COMPLIANCE

according to

**European Standard EN 55022:1998 Class A**
**EN 61000-3-2:2000, EN 61000-3-3:1995 and EN 55024:1998**
**( IEC 61000-4-2:1995, IEC 61000-4-3:1995, IEC 61000-4-4:1995,**
**IEC 61000-4-5:1995, IEC 61000-4-6:1996, IEC 61000-4-8:1993,**
**IEC 61000-4-11:1994 )**

Equipment : Bar code printer

Model No. : EZ-2XXXYYY (X=0~9, Y=0~9, A~Z, BLANK)

Applicant : **GODEX INTERNATIONAL CO., LTD.**
5F-2, NO. 168, LIAN-CHENG ROAD, CHUNG-HO
CITY, TAIPEI HSIEN, TAIWAN, R.O.C.

I **HEREBY** CERTIFY THAT :

The measurements shown in this test report were made in accordance with the procedures given in **EUROPEAN COUNCIL DIRECTIVE 89/336/EEC.** The equipment was ***passed*** the test performed according to **European Standard EN 55022:1998 Class A, EN 61000-3-2:2000, EN 61000-3-3:1995 and EN 55024:1998 ( IEC 61000-4-2:1995, IEC 61000-4-3:1995, IEC 61000-4-4:1995, IEC 61000-4-5:1995, IEC 61000-4-6:1996, IEC 61000-4-8:1993, IEC 61000-4-11:1994 ).** The test was carried out on Oct. 25, 2002 at **SPORTON International Inc.** LAB.

Nov. 09, 2002

K. J. Lin
Manager

***SPORTON International Inc.***

6F, No. 106, Sec. 1, Hsin Tai Wu Rd., Hsi Chih, Taipei Hsien, Taiwan, R.O.C.

**1-3 UL REPORT**

File E214683 Vol. 1 Sec. 2 Page 1 Issued: 2003-01-03
and Report Revised: 2003-07-08

DESCRIPTION

PRODUCT COVERED:

*USL/CNL - Bar code printer, Model EZ-2XXXYYY, where X may be 0-9, Y may be 0-9, A-Z or blank; Models H-426X and H-434X where X may be A-Z or blank.

ELECTRICAL RATING:

100-240 V ac, 50-60 Hz, 3 A

ENGINEER CONSIDERATIONS (NOT FOR FIELD REPRESENTATIVE'S USE):

Special Considerations - The following items are considerations that were used when evaluating this equipment.

USL/CNL indicates investigation to the U.S. and Canadian (Bi-National) Standard for Safety of Information Technology Equipment, Including Electrical Business Equipment, CAN/CSA C22.2 No. 60950-00 * UL 60950, Third Edition, including revisions through revision date March 15, 2002.

The units were submitted and tested for a maximum manufacturer recommended ambient (Tmra) of 40°C.

The equipment is movable, Class I (earthed), pluggable Type A or B, uses a detachable power cord, intended for use on a TN system.

Disconnect device - The following part is considered the equipment disconnect device: An appliance coupler.

Limited Power Source: The following circuits have been evaluated as a limited power source:

| Location | Circuit (Schematic) Designation |
|---|---|
| USB Connector | USB 1 |

**1.4 TÜV/GS CERTIFICATE**

# Zertifikat *Certificate*

TÜV

**Zertifikat Nr.** *Certificate No.*
S 50020967

**Blatt** *Page*
0001

| Ihr Zeichen *Client Reference* | Unser Zeichen *Our Reference* | Ausstellungsdatum | *Date of Issue (day/mo/yr)* |
|---|---|---|---|
| R2N1906/Sporton | ZTW1-SSY- 10005545 001 | 26.12.2002 | |

**Genehmigungsinhaber** *License Holder*
Godex International Co. Ltd.
5F-2, No.168, Lian-Cheng Road
Chung-Ho City, Taipei Hsien 235
Taiwan

**Fertigungsstätte** *Manufacturing Plant*
Godex International Co. Ltd.
5F-2, No.168, Lian-Cheng Road
Chung-Ho City, Taipei Hsien 235
Taiwan

**Prüfzeichen** *Test Mark*

TÜV Rheinland Product Safety
GS geprüfte Sicherheit

**Geprüft nach** *Tested acc. to*
EN 60950:2000

| Zertifiziertes Produkt (Geräteidentifikation) *Certified Product (Product Identification)* | Lizenzentgelte - Einheit *License Fee - Unit* |
|---|---|
| Drucker (Bar Code Printer) | |
| Bezeichnung (Type Designation) : EZ-2XXXYYY | 6 |
| X steht für (stands for) : 0-9 oder (or) A-Z | 1 |
| Y steht für (stands for) : 0-9, A-Z oder (or) freibleibend (blank) | 1 |
| Nennspannung (Rated Voltage) : AC 100-240V, 50-60Hz | |
| Nennstrom (Rated Current) : 3A | |
| Schutzklasse (Protection Class) : I | |
| | 8 |

ANLAGE (Appendix): 1

TÜV Rheinland Product Safety GmbH — TÜV Rheinland — Zertifizierungsstelle

Dem Zertifikat liegt unsere Prüf- und Zertifizierungsordnung zugrunde. Das Zertifikat ist max. 5 Jahre gültig, gerechnet jeweils vom Ausstellungsdatum des letzten Blattes. Produkt und Fertigungsstätte erfüllen Par. 3 Abs. 1 und 4 des Gerätesicherheitsgesetzes.
*This certificate is based on our Testing and Certification Regulation. The certificate is valid for max. 5 years after the date of issue of the latest page. Product and production fulfill par. 3 Art. 1 and 4 of the German Safety Law.*

**Zertifizierungsstelle**


**TÜV Rheinland Product Safety GmbH, Am Grauen Stein, D-51105 Köln**
*Zugelassene Stelle nach Par. 9 Abs. 2 GSG, Registered Authority acc. par. 9 Art. 2 GSG*

Tel.:(+49/221)8 06 - 13 71 Fax:(+49/221)8 06 - 39 35 e-mail: Althofff@de.tuv.com

**Dipl.-Ing. A. Klinker**

## 1.5 TÜV/CB REPORT

IEC | IECEE CB SCHEME

**Ref. Certif. No.**

JPTUV-005393-M1

IEC SYSTEM FOR MUTUAL RECOGNITION OF TEST CERTIFICATES FOR ELECTRICAL EQUIPMENT (IECEE) CB SCHEME

SYSTEME CEI D'ACCEPTATION MUTUELLE DE CERTIFICATS D'ESSAIS DES EQUIPEMENTS ELECTRIQUES (IECEE) METHODE OC

# CB TEST CERTIFICATE
# CERTIFICAT D'ESSAI OC

| | |
|---|---|
| Product<br>Produit | Bar Code Printer |
| Name and address of the applicant<br>Nom et adresse du demandeur | Godex International Co. Ltd.<br>5F-2, No.168, Lian-Cheng Road<br>Chung-Ho City, Taipei Hsien 235 Taiwan |
| Name and address of the manufacturer<br>Nom et adresse du fabricant | Godex International Co. Ltd.<br>5F-2, No.168, Lian-Cheng Road<br>Chung-Ho City, Taipei Hsien 235 Taiwan |
| Name and address of the factory<br>Nom et adresse de l'usine | Godex International Co. Ltd.<br>5F-2, No.168, Lian-Cheng Road<br>Chung-Ho City, Taipei Hsien 235 Taiwan |
| Rating and principal characteristics<br>Valeurs nominales et caractéristiques principales | Input Rating : AC 100-240V, 50-60Hz, 3A<br>Protection Class: I |
| Trade mark (if any)<br>Marque de fabrique (si elle existe) | 1) GODEX 2) Intermec 3) DATAMAX |
| Model/type Ref.<br>Ref. de type | EZ-2XXXYYY (X=0-9, A-Z; Y=0-9, A-Z or blank) |
| Additional information (if necessary)<br>Information complémentaire (si nécessaire) | For differences between the models, refer to the test report<br>Remark : Replaces JPTUV-005393 dated 27.12.2002, due to first modification. |
| A sample of the product was tested and found to be in conformity with<br>Un échantillon de ce produit a été essayé et a été considéré conforme à la | **PUBLICATION** **EDITION**<br>IEC 60950:1999<br>inclusive CENELEC Common Modifications<br>National differences see test report |
| As shown in the Test Report Ref. No.which forms part of this Certificate<br>Comme indiqué dans le Rapport d'essais numéro de référence qui constitue une partie de ce Certificat | 12003999 002 |

This CB Test Certificate is issued by the National Certification Body
Ce Certificat d'essai OC est établi par l'Organisme National de Certification

TÜV

TÜV Rheinland Berlin Brandenburg

TÜV Rheinland Japan Ltd.
Shin Yokohama Daini Center Bldg. 9F
3-19-5, Shin Yokohama, Kohoku-ku
Yokohama 222-0033 Japan
Phone + 81 45 470-1850
Fax + 81 45 470-5221
Mail: Info@jpn.tuv.com
Web: www.tuv.com

Date: 26.02.2003

Signature: Dipl.-Ing. W. Herlitschke

**1.6 CCC CERTIFICATE**

# 中国国家强制性产品认证证书

CERTIFICATE FOR CHINA COMPULSORY PRODUCT CERTIFICATION

证书编号：2003020904000040

申请人名称及所在地：

科诚股份有限公司
台湾台北县中和市建成路168号5楼之2

商标：GODEX

制造商：科诚股份有限公司

生产企业名称及所在地：

科诚股份有限公司(B340024)
台湾台北县中和市建成路168号5楼之2

产品名称和系列、规格、型号：工业条形码标签机

EZ-2XXXYYY(X=0-9,Y=0-9,A-Z,or blank,用于区别销售客户)

产品标准和技术要求：

GB4943-2001,GB9254-1998,GB17625.1-1998

上述产品符合强制性产品认证实施要求，特发此证。

证书的生效日期：二〇〇三年五月二十三日

《证书》的有效性需定期的监督获得支持

中心主任：

壹宪昧

中国质量认证中心

**1.7 BSMI REPORT**

**SPORTON INTERNATIONAL INC.**

SPORTON LAB.

NVLAP

*CNS* 電磁相容試驗報告　　報告編號：**B292303**

Version:B

證書編號：B292303

# 證　　明　　書

**(CNS 13438 甲類)**

產品名稱　：工業型條碼標籤機

產品型號　：**EZ-2000; EZ-2200D; EZ-2200I; EZ-2300D; EZ-2300I; EZ-2100; EZ-2200; EZ-2300; EZ-2200P; EZ-2300P; EZ-2100P**

申請廠商　：科誠股份有限公司
台北縣中和市連城路一六八號五樓之二

茲在此鄭重聲明：

本試驗報告所列之待測設備樣品已於民國 91 年 10 月 25 日在本公司的標準測試場地完成詳細及完整之量測。本試驗報告所列之量測皆依據 CNS 13438 86 年 5 月 27 日修訂版 之規定來執行。並判斷此待測設備樣品確實符合 CNS 13438 中所規定甲類設備之傳導干擾電壓限制值及輻射干擾場強限制值。

測試場地位置　：臺北縣林口鄉頂福村 6 鄰 30-2 號
電話：886-2-2601-1640
傳真：886-2-2601-1695
測試場地位置　：傳導測試場地 CL01，戶外測試場地 OL02

特據此證明！

**耕興股份有限公司**
總經理室高級助理　林 奎 君

林奎君 91.11.09

臺北縣汐止市新台五路一段 106 號 6 樓

**1.8 BSMI CERTIFICATE**

# 經濟部標準檢驗局
# 商 品 型 式 認 可 證 書

**Certificate of the Type Approval of Product**

**Bureau of Standards, Metrology and Inspection, Ministry of Economic Affairs**

證書號碼：TA0913A1230012 號
Certificate No.

茲據 科誠股份有限公司 申請型式認可，
經審查結果符合規定，准予認可，並使用檢驗標識
及識別號碼： T3A123。其認可事項如下：

The application made by _____ for Type Approval of Product has been reviewed and found to be in compliance with related regulations. Therefore,approval is granted with the Certification Mark and Identification No. T3A123. Details of approval are as follows:

申 請 人： 科誠股份有限公司
Applicant

地 址： 台北縣中和市連城路168號5樓之2
Address

**產品種類名稱：**
Type / name of product

一、商品分類號列： 8471.60.20.90.8
C.C.C. Code

二、中文名稱： 工業型條碼標籤機
Chinese name

三、英文名稱： Bar Code Printer
English name

四、型 式： EZ-2000
Type

五、系列型號： 詳如附表
Series type

六、依據標準/日期： 空白
Standards / Date

標準檢驗局或所屬發證機關發證
（本證經發證機關使用鋼印後生效）
This certificate shall be issued by BSMI or its branches.
(This certificate will become effective only when stamped with this Bureau's seal)

| | | | | | | | |
|---|---|---|---|---|---|---|---|
| 認可日期：中華民國 Approval Date | 九十二 2003 | 年 (year) | 一 01 | 月 (month) | 二十一 21 | 日 (day) |
| 本證明書有效期限至 Expiration Date | 九十五 2006 | 年 (year) | 一 01 | 月 (month) | 二十 20 | 日 (day) |
| 發證日期：中華民國 Date of issue | 九十二 2003 | 年 (year) | 二 02 | 月 (month) | 十一 11 | 日 (day) |

## 2.1 PROGRAMMER'S MANUAL


P/N. 920-011212-01

Edition 1

OCT.. 31


# EZ-2200/EZ-2300 Programmer's Manual

**EZ-2200/EZ-2300 PROGRAMMER'S MANUAL ..... 11**

**1. COMMANDS ..... 13**

1-1. EZPL ..... 13

1-2. Language Description ..... 14

1-3. Barcode ..... 23

**2. EXAMPLES ..... 24**

**APPENDIX. ..... 30**

A. Barcode Details ..... 30

# 1. Commands

## 1-1. EZPL

The EZPL (EZ Programming Language) is a high-level label definition and printer control language.
The features are:

1. The data fields are stored and processed until the printing instruction is received.
2. All the data can be rotated.
3. Images can be downloaded and stored.

There are three basic types of commands:
Setup
Control
Label format

**Setup commands**

Contain the printer control instructions, configuration instructions and image downloading instructions.

| Description | | Command | Page |
|---|---|---|---|
| 1. | Printing mode | ^Ax | 14 |
| 2. | Stop position setting | ^Ex | 14 |
| 3. | Setting Print darkness | ^Hx | 14 |
| 4. | Number of pages printed | ^Px | 15 |
| 5. | Label length | ^Qx,y(,z±) | 15 |
| 6. | Speed setting | ^Sx | 15 |
| 7. | Number of copies per label | ^Cx | 15 |
| 8. | Row column adjustment | ^Rx | 15 |
| 9. | Label format begin sign | ^L | 15 |
| 10. | Stripper sensor | ^Ox | 15 |
| 11. | Download label format | ^Fname | 16 |
| 12. | Recall label format | ^Kname | 16 |
| 13. | Label width setting | ^Wxx | 16 |
| 14. | Number of labels per cut | ^Dx | 16 |
| 15. | Serial Port translation setting | ^Yp1.p2,p3,p4 | 16 |
| 16. | Set the forward length | ^Mx | 16 |
| 17. | Set the backward length | ^Bx | 16 |

**Control commands**

Cause the printer to take action immediately, such as cleaning memory, feeding label.

| Description | | Command | Page |
|---|---|---|---|
| 18. | Graphic download memory | ~Ea, name, length | 17 |
| 19. | Bit-Mapped font download | ~Jn | 17 |
| 20. | Graphic mode | ~G | 17 |
| 21. | Print last label | ~Px | 17 |
| 22. | Print version message | ~V | 17 |
| 23. | Date / Time setting | ~Dm,d,y,h,I,s | 17 |
| 24. | Reset printer | ~Z | 17 |
| 25. | Printer head testing | ~T | 17 |
| 26. | Clear all | ~MDEL | 17 |
| 27. | Clear memory | ~MDELx,name | 18 |
| 28. | Rotate printing | ~Rx | 18 |
| 29. | Print the available space and data name in the memory | ~Xn | 18 |
| 30. | Acknowledge form RS-232 | ~Kn | 18 |
| 31. | Row Offset Adjustment | ~Q±n | 18 |

**Label formatting commands**

Define field data, such as Line, Rectangle, Barcode, Text and image.

| Description | | Command | Page |
|---|---|---|---|
| 32. | Define date layout | Daa\|bb\|cc | 18 |
| 33. | Serial number setting | Cx,ys,±value,prompt | 18 |
| 34. | Terminate label formatting mode and print label | E | 19 |
| 35. | Graphic command | Gwxxx | 19 |
| 36. | Line command | La,x, y, x1, y1 | 19 |
| 37. | Rectangle | Rx, y, x1,y1, lrw, ubw | 19 |
| 38. | Table | Hx,y,row_count,col_count,row_width,col_width,line_width | 19 |
| 39. | Define time layout formatting | Th\|m\|s | 20 |
| 40. | Graphics | Yx, y, name | 20 |
| 41. | Text | At, x, y, x_mul, y_mul, gap, rotation, data | 20 |
| 42. | Barcode | Bt,x,y,narrow,wide,height,rotation,readable,data | 21 |
| 43. | PDG 417 | Px,y,w,h,r,c,ec,len | 21 |
| 44. | Maxicode | Mx, y, sno, nos, mode, ccode, zip, class, rotation, message | 21 |
| 45. | DataMatrix Code | Xp1, p2, p3, data | 22 |
| 46. | Define variable field | Vxx, length, prompt | 22 |
| 47. | Pattern command | Qx, y, width, height | 23 |
| 48. | Downloading character sets to memory | Vt, x, y, x_mul, y_mul, gap, rotation, data | 23 |

## 1-2. Language Description

**Rules and syntax**

EZPL commands have parameter strings associated with them;

The commands begin with a letter as ID for each function.

The comma (,) is the delimiter to separate each parameter.

The CR [Carriage Return: decimal (13), hex (oD) signifies the end of every command.

Control and Setup commands use the tilde (~) and caret (^) prefix.

Label Formatting commands have no prefix.

Example: “~Ea,name,length “. ”E” is an image download command, and (a,name,length) are three parameters.

**Setup commands**

49. Printing mode

Syntax : ^Ax

Parameter : x = D or T

Description : x = D , Direct thermal mode

x = T , Thermal transfer mode

50. Stop position setting

Syntax : ^Ex

Parameter : X = 0~40 (unit : mm)

Description : Feed paper to desired stop position.

51. Setting Print darkness

Syntax : ^Hx

Parameter : X = 00 ~ 19

Description : Set printing darkness.

52. Number of pages printed

Syntax : ^Px

Parameter : x = 1 ~ 32767

Description : Set how many labels to print; and it will initiate the program.

53. Label length

Syntax : ^Qx,y(,z±)

Die cut label：(See fig. 1)

x = Label length (unit : mm)

y = Gap length (mm)

Parameter : EX.

^Q25,3

(x=25,y=3) mm

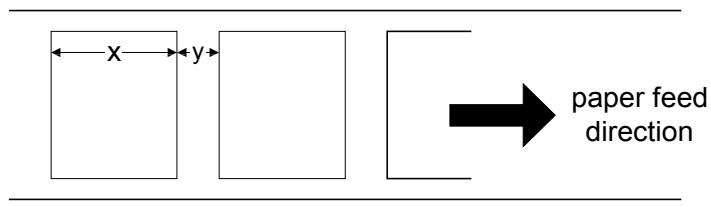


Plain paper:

x = Label length (unit : mm)

y = 0 (constant)

z = Feed paper length (unit : mm)

Black mark label:

x = Label length (unit : mm)

y = Black mark width (mm)

z = Black line to top of form position.

z+ : When the position is outside the black mark.

z- : When the position is within the black mark.

EX.

^Q25,4,3+

(x=25, y=4, z=3+) mm

^Q25,4,3-

(x=25, y=4, z=3-) mm

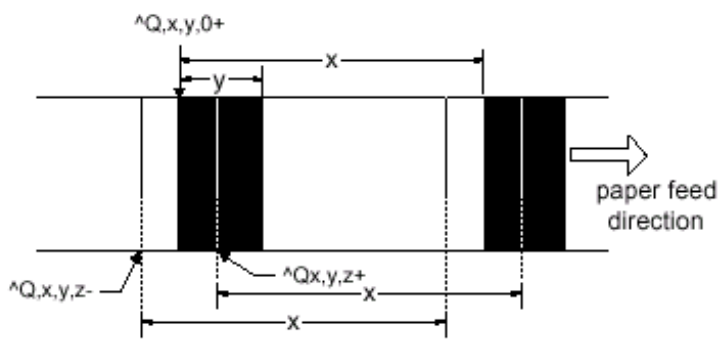


Description : Set label size (length, gap length, [plain paper feed length])

54. Speed setting

Syntax : ^Sx

Parameter : x=1 to 6 (inch/sec)

Description : Set printing speed

55. Number of copies per label

Syntax : ^Cx

Parameter : X = 0 ~ 32767

Description : Number of copies of the same label.

56. Row column adjustment

Syntax : ^Rx

Parameter : x = 0 ~ 399 dots

Response : None

Description : Set left margin

57. Label format begin sign

Syntax : ^L

Parameter : None

Descripton : Set label begin sign

58. Stripper sensor

Syntax : ^Ox

Parameter : x = 0 , stripper disable.

x = 1 , stripper enable

Description : Enable or disable the stripper sensor. When you use this command, it should be matched with^Ex. (refer page 27)

59. Download label format

Syntax : ^Fname
data

Parameter : Name = name of label format (up to 20 characters)
Data = the data containing the label formatting command for this stored format

Description : Download label format into memory. After the download is finished, the printer will beep once (refer page 29).

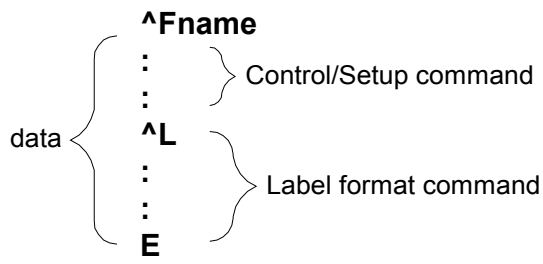


Same name inspection : If you use the same file name, the printer will print ”REPEAT FILE NAME”, and the download will be not be accepted.

60. Recall label format

Syntax : ^Kname

Parameter : Name = name of recall label format (up tp 20 characters)

Description : Recall label format from external format (refer page 30)

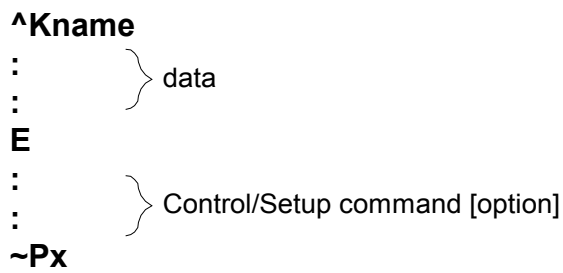


61. Label width setting

Syntax : ^Wxx

Parameter : x=label width (mm)

Description : Label width setting

62. Number of labels per cut

Syntax : ^Dx

Parameter : X = 0 , disable cutting.
X = 1 ~ 32767 , number of label per cut.

Description : Number of labels per cut (refer page 27)

63. Serial Port translation setting

Syntax : ^Yp1.p2,p3,p4

Parameter : p1 : Baud Rate (48 or 96 or 19 or 38) ; 48=4800bps; 96=9600bps; 19=19200bps; 38=38400bps
p2 : Parity (N, O, E) ; N=none parity; O=odd parity; E=even parity
p3 : Number of data bits (7 or 8)
p4 : Number of stop bits (1 or 2)

Description : Serial Port translation setting

64. Set the forward length

Syntax : ^Mx

Parameter : x = forward length (mm)

Description : Set the forward length of the paper

65. Set the backward length

Syntax : ^Bx

Parameter : x = backward length (mm)

Description : Set the backward length of the paper

**CONTROL COMMAND**

66. Graphic download memory

Syntax : ~Ea, name, length

Parameters : a = P or p : PCX file
a = B or b : BMP file
name : Name of image (up to 20 character)
length : Length of image (bytes), maximum 512K byte.

Description : Download monochrome image onto memory. Printer will beep 1 time after completely downloaded. If you use the same file name, the printer will show ”REPEAT FILE NAME”, and the download will be not be accepted (refer page 29).

67. Bit-Mapped font download

Syntax : ~Jn

Parameters : n = character; From a ~ z or A ~ Z; at least up to 26 characters.

Description : The command used for font loading is usually generated by Qlabel-III label creation software. The printer will beep once after downloaded. If you use the same file name, the printer will show ”REPEAT FILE NAME”, and the download will be not being accepted. The downloaded font are compatible with the HP Laser Jet II Plus (PCL-4).

Example : Download the “HVR0OE1A.SFP” text file to external memory card. Use “A” to do the character code name.

| | |
|---|---|
| ~JA | ; Define A as HVR0OE1A.SFP |
| COPY HVR0OE1A.SFP PRN/B | ; Send the order with the DOS mode |

68. Graphic mode

Syntax : ~G

Parameter : None

Decription : Printer is in the image-receiving mode. Image data is directly sent from host to the printing buffer (refer page 28)

69. Print last label

Syntax : ~Px

Parameter : x = 1 ~ 32767

Description : This command will repeatedly print the indicated copies of the last label format.

70. Print version message

Syntax : ~V

Parameter : None

Description : Print firmware version.

71. Date/Time setting

Syntax : ~Dm,d,y,h,I,s

Parameter : m = Month (01 to 12) h = Hour (00 to 23)
d = Date (01 to 31) i = Minutes (00 to 59)
y = Year (last two digits of year) s = Seconds (00 to 59)

Description : Set real time clock.

72. Reset printer

Syntax : ~Z

Parameter : None

Description : Reset the printer, the LED will flash once.

73. Printer head testing

Syntax : ~T

Parameter : None

Description : Print a pattern for the user to determine if the print head is damaged (refer page 30)

74. Clear all

Syntax : ~MDEL
Parameter : none
Description : Clear all in the memory (not include Asia font)

75. Clear memory

Syntax : ~MDELx,name
Parameter : x = type
G, graphic
F, label form
E, Bit-Mapped font (not included Asia font)
name: The name of the graphic, form and Bit-Mapped font
Description : Able to delete individual files or erase entire flash memory.
Example : ~MDELG,Bus ; the graphic “Bus” will be deleted

76. Rotate printing

Syntax : ~Rx
Parameter : x = label width; from 1 to 104 (mm)
Description : Rotate the label format 180-degrees when printing (refer page 29). To return to the original print direction, set the x value greater than 104 (ie. ~R105).

77. .Print the available space and data name in the memory

Syntax : ~Xn
Parameter : n = 1, print label format names and available space in memory.
n = 2, print graphic names and available space in memory.
n = 3, print Bit-Mapped font names and available space in memory.
n = 4, print the name of the label formats, graphics, fonts, and available space in memory.
n = 5, print Asia font names and available space in memory
n = 6, display the total printed length on the LCD
Description : Print the available space in the memory card (unit: bytes)

78. Acknowledge from RS-232

Syntax : ~Kn
Pararmeter : n = 0, disable.
n = 1, enable.
Return value : Y8
Description : Acknowledge a “Y(0D0A)” from RS-232 back to host each printing label.

79. Row Offset Adjustment

Syntax : ~Q±n
Pararmeter : n=-36 ~ +36
Return value : none
Description : If the printing doed not appear in the same place on every label, this command instructs the printer to print label formats +n increments above the position the format specifies, and –n decrements below the position the format specifies.

## Label formatting commands

80. Define date layout

Syntax : Daa|bb|cc
Parameter : aa = Year
y2 : Year with two digits (such as 97)
y4 : Year with four digits ( such as 1997)
bb = Month
me : Month in letters (JAN, FEB, .... )
mn : Month in numeric (01, 02, .... )
cc = 2 digits day
| = Separator, can be any ASCII character between decimal 32 to 63.
Description : Define the date layout for print out (refer page 25)

81. Serial number setting

Syntax : Cx,ys,±value,prompt

Parameter : x: 0 to 9(up to10group), maximum combination up to 3 groups.

y: select the decimal

y = none, Decimal (0~9)

y = A, Hexadecimal (0~9,A~F)

y = C, 0~9, A~Z

s: start value of serial variable (up to 13-digit)

±value: inc. / dec. value of serial variable (up to 12-digit)

prompt: prompt of serial variable (up to 20 characters)

Description : Set the serial number (refer page 27)

Example : ^Q50,0,0 Printing result:

```
^W100
^S6                    000EEZYY
^H10                   001EFZYZ
^E12                   002F0ZZ0
^P5                    003F1ZZ1
^L                     004F2ZZ2
C0,000,+1,AA
C1,AEE,+1,BB
C2,CZYY,+1,CC
AC,5,5,1,1,1,0,^C0^C1^C2
E
```

82. Terminate label formatting mode and print label

Syntax : E

Parameter : None

Description : End of formatting command; printer will print label after receiving this command.

83. Graphic command

Syntax : Gwxxx

Parameter : wxxx...

w : byte number of image data (xxx...)

Description : This command is a sub-command of ~G It is sent by binary data. W is the digits number byte of image data (refer page 28). For example, if the image file is 50 bytes, the command is G2xxx . (2: ASCII is 50 decimal)

84. Line command

Syntax : La,x, y, x1, y1

Parameter : a = o, overwrite line

a = e, exclusive or line

x : left-up; per horizontal(Hori.) pos. (dot; 1mm= 8dots)

y : left-upper vertical (Vert.) pos. (dots)

x1: right-bottom Hori. Pos. (dots)

y1: right-bottom Vert. Pos. (dots)

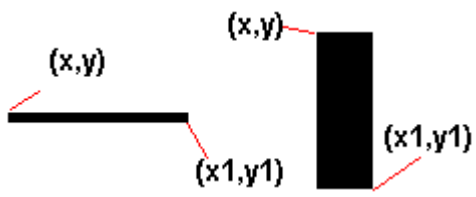


Description : Define a line to render in the label (refer page 26)

** The diagonal line draw is not available **

85. Rectangle

Syntax : Rx, y, x1,y1, lrw, ubw

Parameter : x : left-upper Hori .pos. (dots)

y : left-upper Vert. Pos. (dots)

x1 : right-bottom Hori. Pos. (dots)

y1 : right-bottom Vert. Pos. (dots)

lrw : thickness of left, right border (dots)

ubw : thickness of upper bottom border (dots)

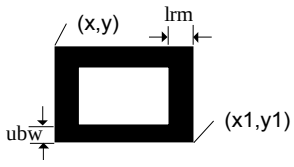


Description : Draw a rectangle in the label (refer page 26)

86. Table

Syntax : Hx,y,row_count,col_count,row_width,col_width,line_width

Parameter : x : left-upper Hori .pos. (dots)

y : left-upper Vert. Pos. (dots)

row_count : numbe of rows

col_count : number of columns

row_width : row width

col_width : column width

line_width : line width

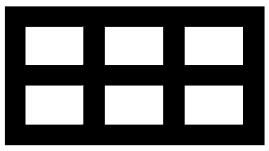

Description : Draw a table in the label.

Example : H20,20,2,3,30,20,10

87. Define time layout formatting

Syntax : Th|m|s

Parameter : h = Hour format ( 2 digits, 00 ~ 23)

m = Minute format ( 2 digits, 00 ~ 59)

s = Second format (2 digits, 00 ~ 59)

| = Separator (It can be any separator between dec. 32 to 63 of ASCII).

Descripton : Define the time layout for internal real-time clock (refer page 25)

88. Graphics

Syntax : Yx, y, name

Parameter : x : Hori. Pos. of left-upper of graphics (dots)

y : Vert. Pos. of left-upper of graphics (dots)

name : Name of graphics download

Description : This command is print a graphic that has been previously stored in printer memory (refer page 29)

Example:

A graphic in printer named “Graphic1”, command Y20,40,Graphic1 ↵ will put this graphic into label at position (20,40).

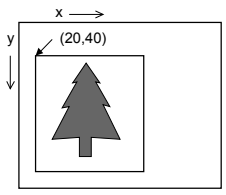


89. Text

Syntax : At, x, y, x_mul, y_mul, gap, rotation, data

Parameter : t :Font(A~H for Code page 850; I for ASCII)

| Font | Points | Font style |
|---|---|---|
| A | 6 | CG Triumvirate |
| B | 8 | CG Triumvirate |
| C | 10 | CG Triumvirate |
| D | 12 | CG Triumvirate |
| E | 14 | CG Triumvirate |
| F | 18 | CG Triumvirate |
| G | 24 | CG Triumvirate |
| H | 30 | CG Triumvirate |
| I | 16x26 dots for US ASCII 8 bit | |
| t = Zn | Asia font from 1 to 4 | |

x : Hori of left-bottom position of text (unit : dot, 1 mm = 8 dots)

y : Vert of left-bottom position of text (unit : dot, 1 mm = 8 dots)

x_mul : Horizontally magnified up to 8 times as large

y_mul : Vertically magnified up to 8 times as large

gap : Distance of the character (unit : dot, 1 mm = 8 dots)

rotation : The rotation of ASCII text from 0 to 3, the Asian text rotation form 0 to 7

0) 0° 1) 90° 2) 180° 3) 270° 4) 0° 5) 90° 6) 180° 7) 270°

data : Data string (up to 239 characters).

90. Constant
91. Date information (^D)
92. Time information (^T)
93. Serial variable (^Cx)
94. Variable data (^Vxx)

Description : Prints an ASCII or ASIA text string (refer page24). The ASCII text oriented form left to right, the Asian text from left to right or top to bottom.

95. Barcode

Syntax : Bt,x,y,narrow,wide,height,rotation,readable,data

Parameter : t : bar-code type

| | | | |
|---|---|---|---|
| A | Code 39 | L | UPC E - Add ON 2 |
| A2 | Code 39 with check digit | M | UPC E - Add ON 5 |
| B | EAN 8 | N | I 2 of 5 |
| C | EAN 8 - Add ON 2 | N2 | I 2 of 5 with check digit |
| D | EAN 8 - Add ON 5 | O | Codabar |
| E | EAN 13 | P | Code 93 |
| F | EAN 13 – Add ON 2 | Q | Code 128 (auto subset A/B/C) |
| G | EAN 13 – Add ON 5 | Q2 | Code 128 (subset A/B/C) |
| H | UPC A | R | UCC 128 |
| I | UPC A - Add ON 2 | S | Post NET |
| J | UPC A - Add ON 5 | T | DUN 14 ONLY 90 |
| K | UPC E | U | EAN 128 |
| | | V | RPS 128 |

x : Hori. of left-bottom pos. of barcode (unit: dot, 1 mm = 8 dots)

y : Vert. Of left-bottom pos. of barcode (unit: dot, 1 mm = 8 dots)

narrow (x dimension): narrow bar from 1 ~ 10 dots (0.125 ~ 1.25 mm)

** DUN 14 narrow setting from 5 ~ 8 dots; UPC/EAN narrow setting from 2 ~ 4 dots **

wide : wide bar from 2 ~ 30 dots (0.25 ~ 0.5 mm) ; **CODE 39, 93, CODABAR & I 2 of 5**

height : height of barcode from 24 ~ 1200 dots.

rotation : rotation of barcode (0 ~ 3)

0) 0° 1) 90° 2) 180° 3) 270°

readable : 0- label off, 1- label on

data : bar-code data.

96. Constant
97. Date information (^D)
98. Time information (^T)
99. Serial variable (^Cx)
100. Variable data (^Vxx)

Description : Used to print standard barcodes (refer page 25)

101. PDF 417

Syntax : Px,y,w,h,r,c,ec,len
Data

Parameters : x : Hori. of left-bottom pos. of barcode ( unit : dots)

y : Vert. of left-bottom pos. of barcode (unit : dots)

w : Width (x dimension) of the narrowest element (bar or space) in the barcode.

h : Height (y dimension) of each barcode row in the symbol.

r : number of barcode rows, from 3 to 90. If you key in 0, printer will count all the rows.

c : number of barcode columns, from 1 ~ 30. If you key in 0, printer will count the all columns.

ec : error correction level: 0 ~ 8.

len :number of encoded data bytes, including carriage returns ↵ and line feed.

Data : data to be encoded(the length of the data is equal to len; up to 1024 characters)

Description : Print a 2 dimensional PDF417 code (refer page 26)

102. Maxicode

Syntax : Mx, y, sno, nos, mode, ccode, zip, class, rotation, message

Parameter : x : Hori. of left-bottom pos. of barcode (unit: dots).

y : Vert. of left-bottom pos. of barcode (unit: dots).

sno : symbol number, in set of symbols：1 ~ 8.

nos : number of symbols in set of symbols：1 ~ 8 sets.

mode : mode of maxicode 2, 3, 4 or 6.

Ccode : 3 digits country code.

zip : postal code

9 digits for US style postal code. If there is a 5 digits zip code, 4 zeros must be padded

6 digits alphanumeric zip code for non-US style postal code.

class : service class, 3 digits numeric.

rotation : rotation of barcode (0 : 0°).

message : 1 ~ 84 characters.

Description : Print a 2 dimensional Maxicode (refer page 26)

103. DataMatrix Code

Syntax : Xp1, p2, p3, data

Parameters : p1 : Hori. of left-bottom pos. of barcode ( unit : dots).

p2 : Vert. of left-bottom pos. of barcode (unit: dots).

p3 : Engrge the DataMatrix Code 8 times (horiqontally and vertically).

data : bar-code data (up to 500 characters).

Description : User defined variable field setting (refer page 26)

104. Define variable field

Syntax : Vxx, length, prompt

Parameters : xx = from 00 ~ 29

length = number of characters (up to 98characters).

prompt = prompt of variable (maximum up to 20 characters)

Description : User defined variable field setting (refer page 29 )

105. Pattern command

Syntax : Qx, y, width, height
Data...

Parameters : x = Hori. of left-bottom pos. (unit : dots).
y = Vert. of left-bottom pos. (unit : dots).
width = width of graphic (unit : byte)
height = height of graphic (unit : dots)
(data length = width x height)

Description :

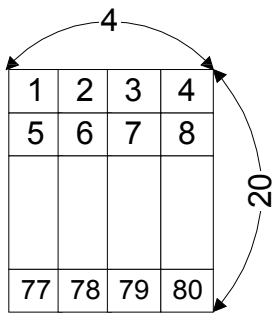


Data send out
1 2 3 4 .....77 78 79 80

width = 4 ; height = 20
(data length : 4x20 = 80)

(refer page29)

106. Downloading character sets to memory

Syntax : Vt, x, y, x_mul, y_mul, gap, rotation, data

Parameter : t: arbitrary name of font; from a ~ z (or A ~ Z)

Description Download Bit-Mapped font to memory. All the parameters are the same as the text command

Example : VA,5,10,1,1,1,0,data ;The arbitrary name of font “A”

## 1-3. Barcode

| CODE | SAMPLE | CODE | SAMPLE |
|---|---|---|---|
| Code 39 | CODE39 | UPC E Add on 2 | 0 234567 3 12 |
| EAN 8 | 1234 5670 | UPC E Add on 5 | 0 234567 3 12345 |
| EAN 8 Add on 2 | 1234 5670 12 | I 2 of 5 | 4321 |
| EAN 8 Add on 5 | 1234 5670 12345 | CODABAR | ABCD |
| EAN 13 | 1 234567 890128 | Code 93 | CODE 93 |
| EAN 13 Add on 2 | 1 234567 890128 12 | Code 128 | CODE 128 |
| EAN 13 Add on 5 | 1 234567 890128 12345 | EAN 128 | EAN 128 |
| UPC A | 1 23456 78901 | MAXICODE | |
| UPC A Add on 2 | 1 23456 78901 2 12 | PDF 417 | |
| UPC A Add on 5 | 1 23456 78901 2 12345 | UPC E | 0 234567 3 |
| DataMatrix Code | | | |

## 2. Examples

**How to construct a label using EZ-Series command**

To create a label, it must be an order command combination.

| | |
|---|---|
| Control command<br>And<br>Setup up command | |
| ^L | ^L is precedent for the beginning of label format |
| Label format command | Label format command must be included between the ^L and E command |
| E | E is ending of label format |

** Control or setup commands to be used in the label command area will be ineffective.

**Example:**

The following program example is printing a label with EAN8. Program is a text file. No matter what language you use in programming, simply send out the text file of the contents and you can control what the EZ-Series prints.

Save the following contents (command file named: EX1.TXT).

| Program command | Description |
|---|---|
| ^Q25,3 | Setting up the height 25mm, gap 3mm |
| ^W32 | Setting up the width 32mm |
| ^H10 | Setting up the darkness 10 |
| ^S6 | Setting up the speed 6 inches per second |
| ^P1 | Setting up the number of printing 1 |
| ^E10 | Setting up the paper advance length to 10 mm from the print head after printing.<br>The label will move back 10 mm when the next label is printed. |
| ^C1 | Setting up the number of copies (start value is 1) |
| ^O0 | Setting up the auto stripper function to be turned OFF |
| ^R0 | Setting up the left margin 0 dot |
| ^D0 | Turning the cutting function off |
| ^L | The label content of start symbol |
| BB,42,39,2,5,100,0,1,12345<br>67 | Select EAN8 label, data content is 1234567(See Charapter 2 section 2) |
| E | Label content of stop symbol |

The label can be created by the following MS-DOS command:

C:\>COPY EX1.TXT PRN↵

To send the label to serial port by the following MS-DOS command:

C:\>MODE COM1 96,N,8,1

C:\>TYPE EX1.TXT >> COM1

**Setting the x and y values:**

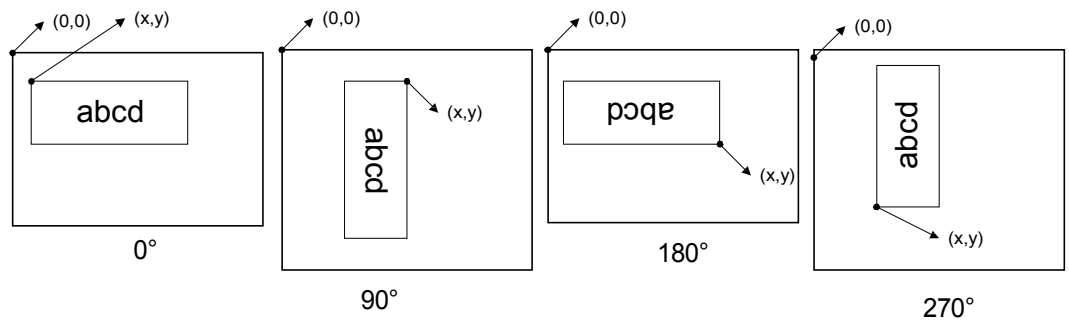


**1. Text**

| Example | Result | Rotate printing | Result |
|---|---|---|---|
| ^Q50,0,2<br>^W50<br>^S6<br>^H10<br>^R10<br>~D8,27,00,8,39,36<br>^L | PRINTER<br>AUG/27/00<br>08:39:36 | ^Q50,0,0<br>^W50<br>^S6<br>^H10<br>^L<br>AC,100,30,1,1,1,0,ROTATION 0<br>AC,40,20,1,1,1,1,ROTATION 90 | ROTATION 0<br>ROTATION 90<br>ROTATION 180<br>ROTATION 270 |

| | | | |
|---|---|---|---|
| AC,10,10,1,1,1,0,PRINTER<br>AC,10,50,1,1,1,0,^D<br>AC,10,100,1,1,1,0,^T<br>E | | AC,260,150,1,1,1,2,ROTATION<br>180<br>AC,290,200,1,1,1,3,ROTATION<br>270<br>E | |
| **Adjusting the character spacing** | **Result** | **Asia Font** | **Result** |
| ^Q30,0,0<br>^W50<br>^S6<br>^H10<br>^L<br>AC,10,10,1,1,10,0,PRINTER<br>AC,10,100,1,1,1,0,PRINTER<br>E | P R I N T E R<br><br><br><br>PRINTER | ^L<br>AZ,100,12,1,1,0,4,中文<br>AZ,220,50,1,1,0,5,中文<br>AZ,75,83,1,1,0,6,中文<br>AZ,121,144,1,1,0,7,中文<br>E | 中文<br>中文<br>中文<br>中文 |

- The data output is a default setting and user can change it with ~D command (refer page18).
- The time output format is a default setting and user can change it with T command.

**2. Barcode**

| Example | Result | Rotation of barcode | Result |
|---|---|---|---|
| ^H10<br>^S6<br>^Q30,0,2<br>^W60<br>^L<br>BB,20,100,3,3,100,0,1,1234567<br>E | 1234 5670 | ^H10<br>^S6<br>^W25<br>^Q30,0,2<br>^L<br>BE,100,20,2,4,80,1,1,123456789<br>012<br>E | 1 234567 890128 |

**3. RTC Setting**

| Change the date formatting | Result |
|---|---|
| Dy4-me-dd | 2000-MAY-29 |
| Dy4/mn/dd | 2000/05/29 |
| Dmn\|dd\|y4 | 05\|29\|2000 |
| Dy4 | 2000 |
| Dme | MAY |
| Ddd | 09 |
| Dy4,me | 2000-MAY |
| Dme-dd | MAY-29 |

**4. Line printing**

| Example | Description | Result |
|---|---|---|
| ^Q50,3<br>^W100<br>^E32<br>^H7<br>^P1<br>^S6<br>^L<br>LO,212,45,311,53<br>LO,244,11,252,128<br>LE,34,43,149,51<br>LE,72,8,80,121<br>E | ; Darkness= 6<br>; Speed = 2 inch/second<br>; Label height = 50mm, gap = 2 mm<br>; Label width = 60mm<br><br><br>; (x,y)=(10,10), (x1,y1)=(60,200)<br><br>; (x,y)=(100,10), (x1,y1)=(400,200) | 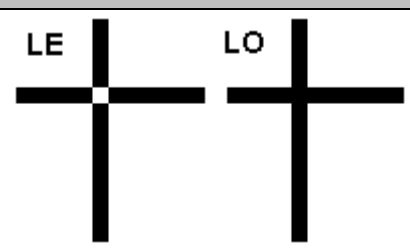 |

**5. Rectangle printing**

| Example | Descripton | Result |
|---|---|---|
| ^H10<br>^S6<br>^Q50,2<br>^W70<br>^L<br>R20,20,120,120,8,8<br>E | ; Darkness = 4<br>; Speed = 2 inch/second<br>; Label height = 50mm, gap = 2 mm<br>; Label width= 70mm<br>; (x,y) = (20,20),<br>(x1,y1) = (120,120)<br>lrw = 8 dots, ubw = 8 dots | 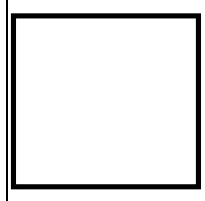 |

**6. PDF417**

| Example | Result |
|---|---|
| ^Q50,0,3<br>^W70<br>^S6<br>^H10<br>^L<br>P30,20,3,3,3,3,1,100<br>12345678<br>12345678<br>12345678<br>12345678<br>12345678<br>12345678<br>12345678<br>12345678<br>12345678<br>12345678<br>E | |

**7. Maxicode**

| Example | Result |
|---|---|
| ^Q50,0,0<br>^W70<br>^S6<br>^H10<br>^L<br>M30,20,1,1,2,840,068107317,8,0,123456<br>E | 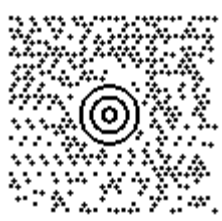 |

**8. DataMatrix Code**

| Example | Result |
|---|---|
| ^Q50,0,3<br>^W90 | |

| | |
|---|---|
| ^S6<br>^H10<br>^L<br>X30,20,5,12345678901234567890123456789 0<br>E | |

**9. Stripper setting**

| Example | Result |
|---|---|
| ^Q50,2 | ; Label height= 50mm, gap= 2mm |
| ^W50 | ; Label width= 50mm |
| ^S6 | ; Speed =2 inch/second |
| ^O1 | ; Stripper enable |
| ^E10 | ; Set stop position to 10 mm |
| ^P1 | ; Printing one label |
| ^H10 | ; Darkness = 5 |
| ^L | ; Label format begin sign |
| AD,20,20,1,1,3,0,Stripper Function | |
| E | ; Label format end and begin print |

**10. Cutter setting**

| Example | Description | Result |
|---|---|---|
| ^Q20,0,0<br>^H5<br>^S2<br>^P10<br>^D2<br>^C1<br>^L<br>R10,10,120,90,2,2<br>C0,001,+1,A1<br>AC,20,30,1,1,1,0,a^C0<br>E | ;plain paper length:20mm<br>feed label length :0mm<br><br>;print 10 labels<br>;2 labels per cut | 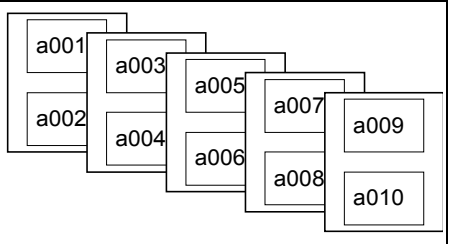  |

**11. Serial number**

| TEXT | | | |
|---|---|---|---|
| **Example 1** | **Result** | **Example 2** | **Result** |
| ^Q10,0,0<br>^W30<br>^S6<br>^H10<br>^P10<br>^L<br>C0,0000,+2,A1<br>AB,10,10,1,1,2,0,^C0<br>E | 0000<br>0002<br>0004<br>0006<br>0008<br>0010<br>0012<br>0014<br>0016<br>0018 | ~P10<br><br><br>If you want to continue printing 10 more serial numbers starting from 0018, enter the command “~P10”. With this command you do not have to re-enter all the prior specifications. | 0018<br>0020<br>0022<br>0024<br>0026<br>0028<br>0030<br>0032<br>0034<br>0036 |
| **Example 3** | **Result** | **Example 4** | **Result** |
| ^Q10,0,0<br>^W30<br>^S6<br>^H10<br>^P4<br>^C2<br>^L<br>C0,0000,+2,A1<br>AB,10,10,1,1,2,0,^C0<br>E | 0000<br>0000<br>0002<br>0002<br>0004<br>0004<br>0006<br>0006 | ^Q10,0,0<br>^W30<br>^S6<br>^H10<br>^P8<br>^L<br>C0,0000,+2,A1<br>AB,10,10,1,1,2,0,abc^C0def<br>E | abc0000def<br>abc0002def<br>abc0004def<br>abc0006def<br>abc0008def<br>abc0010def<br>abc0012def<br>abc0014def |
| **Barcode** | | | |
| **Barcode with serial number** | | **Result** | |

| | |
|---|---|
| ^H10<br>^S6<br>^Q20,0,2<br>^W50<br>^P10<br>^L<br>C0,000,-1,A3<br>BE,20,100,3,3,100,0,1,111111^C0111<br>E | |

**12. Graphic driver format**

| Example | Description |
|---|---|
| ^Q20,2<br>^W50<br>^R20<br>~G | ; Left margin = 20 dots |
| G(AAAAAAAAAAAAAAAAAAAAAAAAAAAAAAAAAAAAAAAA<br>G(AAAAAAAAAAAAAAAAAAAAAAAAAAAAAAAAAAAAAAAA<br>G(AAAAAAAAAAAAAAAAAAAAAAAAAAAAAAAAAAAAAAAA<br>G(AAAAAAAAAAAAAAAAAAAAAAAAAAAAAAAAAAAAAAAA<br>G(AAAAAAAAAAAAAAAAAAAAAAAAAAAAAAAAAAAAAAAA<br>G(AAAAAAAAAAAAAAAAAAAAAAAAAAAAAAAAAAAAAAAA<br>G(AAAAAAAAAAAAAAAAAAAAAAAAAAAAAAAAAAAAAAAA<br>G(AAAAAAAAAAAAAAAAAAAAAAAAAAAAAAAAAAAAAAAA<br>G(AAAAAAAAAAAAAAAAAAAAAAAAAAAAAAAAAAAAAAAA<br>G(AAAAAAAAAAAAAAAAAAAAAAAAAAAAAAAAAAAAAAAA<br>G(AAAAAAAAAAAAAAAAAAAAAAAAAAAAAAAAAAAAAAAA<br>G(AAAAAAAAAAAAAAAAAAAAAAAAAAAAAAAAAAAAAAAA<br>G(AAAAAAAAAAAAAAAAAAAAAAAAAAAAAAAAAAAAAAAA<br>E | For this example, ASCII “(“ character is 40 decimal (=40 bytes). Total 14 lines, so the graphics height is 1.75mm (14 dots) |
| | Result |
| | |

**13. Pattern command setting**

| Example | Result |
|---|---|
| ^Q,20,0,0<br>^W40<br>^S6<br>^D5<br>^L<br>Q40,10,2,8<br>GGGGGGGGGGGGGGGG<br>E | <br><br><br><br><br>Length: 2x8=16 |
| **Description** | |
| 0100011101000111<br>0100011101000111<br>0100011101000111<br>0100011101000111<br>0100011101000111<br>0100011101000111<br>0100011101000111<br>0100011101000111<br>HEIGHT = 8 DOTS<br>1 BYTE 1 BYTE<br>WIDTH = 2 BYTES<br>G : 01000111 (binary) | 8dots<br>2mm |

**14. Rotate label format for printing**

| Example | Description | Result |
|---|---|---|
| ^Q40,2<br>^W50<br>^S6<br>^H10<br>~R50<br>^L<br>AC,35,11,1,1,1,0,ROTATE<br>BB,20,45,2,5,50,0,1,1234567<br>E | ; Label size is 40 mm(h) x 50 mm(w); 2 mm gap<br><br><br><br>; Rotate the label format 180° for printing | ROTATE<br>1234 5670 |
| ~R105<br>^L<br>AC,20,10,1,1,1,0,ROTATE<br>BB,20,45,2,5,50,0,1,1234567<br>E | ; Disable the rotate function | ROTATE<br>1234 5670 |

**15. Download graphic to printer's memory**

Following the below steps to download graphic to printer.

107. Be prepared a graphic file (file name: TREE.PCX, file size: 922 bytes).

108. Be prepared two text files (TEST1.TXTand TEST2.TXT, see the following contents).

| TEST1.TXT | TEST2.TXT | Print Result |
|---|---|---|
| ~EP,TREE,922 | ^Q30,0,0<br>^W50<br>^S2<br>^H5<br>^L<br>Y30,50,TREE<br>E | |

1. In DOS mode, running the following commands.

COPY TEST1.TXT PRN↵

COPY TREE.PCX PRN/B↵

COPY TEST2.TXT PRN↵

**16. Download label and variable settings**

| Example | Description |
|---|---|
| ^Ftest<br>^Q50,0,15 | ; Download label to memory card and the label name is "test". |

| | |
|---|---|
| ^W70 | |
| ^H10 | |
| ^S6 | |
| ^E12 | |
| ^L | |
| C0,0000,+1,serial no. | ; Setting serial number is C0 |
| V00,10,name | ; Setting three variables V00, V01, V02 |
| V01,8,barcode | |
| V02,6,price | |
| AE,108,306,1,1,1,0,$^V02 | |
| AC,39,27,1,1,1,0,S/N.^C0 | |
| AD,126,78,1,1,1,0,^V00 | |
| BA,108,135,2,5,100,0,1,^V01 | |
| E | |

**17. Recall label format from memory**

| Example 1 | Description | Result |
|---|---|---|
| ^Ktest<br>0000<br>Book<br>12345678<br>200.00<br>E<br>~P1 | Recall label format without changing the label format<br>C0 = 0000<br>V00 = book<br>V01 = 12345678<br>V02 = 200.00 | S/N.0000<br>book<br>* 12345678 *<br>$200.00 |
| **Example 2** | **Description** | **Result** |
| ^Ktest<br>1111<br>Pencil<br>12345678<br>100.00<br>E<br>^Q35,0,0<br>^S6<br>^H10<br>~P2 | Recall label format and change label format<br>C0 = 1111<br>V00 = pencil<br>V01 = 12345678<br>V02 = 100.00<br>Changing the size<br>Changing speed to 6”/sec<br>Changing darkness to 10<br>Printing the last label twice | S/N.1111<br>Pencil<br>* 12345678 *<br>$100.00<br><br>S/N.1112<br>Pencil<br>* 12345678 *<br>$100.00 |

Each time you change variable data or label format, repeat to send command from ^Kname to ~Px.

**18. Print head test & Version list**

| Example | Result |
|---|---|
| ~T | |
| ~V | # # # EZ-4206 # # #<br><br># # # VER. X.XX # # # |

# Appendix.

## A. Barcode Details

### 1. Code 128

**BQ2,X,Y,NARROW,WIDE,HEIGHT,RTATION,READABLE,DATA**

Code 128 Subset A: Included the standard uppercase alphanumeric keyboard characters, control and special characters.

Code 128 Subset B: Includes the standard uppercase, lowercase alphanumeric keyboard characters and special characters.

Code 128 Subset C: Used for double density encoding of numeric data (the set of 100 digit pairs from 00 through 99).

| Example | |
|---|---|
| Sbuset A: BQ2,8,8,2,5,40,0,0,AAPPLE | To select Code 128 Subset A, place a ASCII A before the data to be encoded. |
| Subset B: BQ2,8,8,2,5,40,0,0,BAPPLE | To select Code 128 Subset B, place a ASCII B before the data to be encoded. |
| Subset C: BQ2,8,8,2,5,40,0,0,C1234 | To select Code 128 Subset C, place a ASCII C before the data to be encoded. |
| Special character handling:<br>BQ2,8,8,2,5,40,0,0, ATEST&G | To encode FNC1 into a Code 128 Subset A, send the ASCII &G. |

| ASCII | 2 Character | Code A | Code B | Code C |
|---|---|---|---|---|
| 96 | &A | FNC3 | FNC3 | -NA- |
| 97 | &B | FNC3 | FNC2 | -NA- |
| 98 | &C | SHIFT | SHIFT | -NA- |
| 99 | &D | Code C | Code C | -NA- |
| 100 | &E | Code B | FNC | Code B |
| 101 | &F | FNC4 | Code A | Code A |
| 102 | &G | FNC1 | FNC1 | FNC1 |

## 2.2 USER MANUAL


P/N. 920-011211-03

Edition 4

AUG.20


# EZ-2200/EZ-2300 User Manual

FCC COMPLIANCE STATEMENT

FOR AMERICAN USERS

This equipment has been tested and found to comply with the limits for a CLASS A digital device, pursuant to Part 15 of the FCC Rules. These limits are designed to provide reasonable protection against harmful interference when the equipment is operated in a commercial environment. This equipment generates, uses, and can radiate radio frequency energy and, if not installed and used in accordance with the instructions, may cause harmful interference to radio communications. Operation of this equipment in a residential area is likely to cause harmful interference in which case the user will be required to correct the interference at his own expense.

**EMS AND EMI COMPLIANCE STATEMENT**

**FOR EUROPEAN USERS**

This equipment has been tested and passed with the requirements relating to electromagnetic compatibility based on the standards EN50081-1 (EN55022 CLASS A) and EN61000-4-2/-3/-4/-5/-6/-8/-11 (IEC Teil 2,3,4). The equipment also tested and passed in accordance with the European Standard EN55022 for the both Radiated and Conducted emissions limits.

CAUTION

Danger of explosion if battery is incorrectly replaced

Replace only with the equivalent type recommended by the manufacture.

Dispose of used batteries according to the manufacturer’s instructions.

Specifications are subject to change without notice.

**GHAPTER1. BARCODE PRINTER**.....4

1-1. Introduction ..... 4

1-2. Printer Options ..... 4

1-3. Printer Accessories ..... 4

1-4. General Specifications ..... 5

1-5. Communication Interface ..... 6

1-6. Printer Parts ..... 8

**CHAPTER 2. PRINTER INSTALLATION ..... 10**

2-1. Ribbon Installation ..... 10

2-2. Ribbon Inside/Outside Installation ..... 42

2-3. Label Installation ..... 43

2-4. USB Installation ..... 45

2-5. USB Uninstallation ..... 46

2-6. PC Connection ..... 47

**CHAPTER 3 ..... 48**

3-1. Stripper and Internal Rewinder Parts ..... 48

3-2. Stripper and Rewinder Installation ..... 48

3-3. Cutter Parts ..... 50

3-4. Cutter Installation ..... 50

**CHAPTER 4. CONTROL PANEL ..... 52**

4-1. LCD/LED Messages ..... 52

4-2. General Operation ..... 52

4-3. Self-Test ..... 54

4-4. Dump Mode ..... 54

4-5. Auto Sensing ..... 55

4-6. Setting Mode ..... 56

4-7. Error Messages ..... 57

**CHAPTER 5. MAINTENANCE AND ADJUSTMENT ..... 58**

5-1. Thermal Print Head Cleaning ..... 58

5-2. Thermal Print Head Balance Adjustment ..... 26

5-3. Pressure Adjustment ..... 27

5-4. PH Print Line Adjustment ..... 28

5-5. Label Width Guide Operation Instruction ..... 31

5-6. Ribbon Tension Adjustment ..... 32

5-7. Cutter ..... 32

5-8. Troubleshooting ..... 33

# Chapter 1. Barcode Printer

## 1-1. Introduction

The Godex EZ-2000 is a heavy duty, high performance thermal transfer / direct thermal label printer suitable for large volume printing requirements in industrial applications. With robust metal outer casing and inner mechanism, the EZ-2000 is designed to be durable, tough and reliable, even in the harshest environments. Its features are as follows:

- Print head density of 8 dots or 12dots per mm (203 or 300 dots per inch).
- Back light LCD display showing graphics and messages in English and simplied Chinese (version dependent).
- Internal memory card for label, graphics, and fonts download.
- Real Time Clock for time recording and tracking.
- Internal 8” label roll capacity and 450M ribbon length (1” core size).
- Maximum 50” print length.
- Optional stripper and internal rewinder for efficient operation.
- Optional cutter for ticketing or receipt printing applications.

## 1-2. Printer Options

**EZ-2200 (203 DPI)/EZ-2300 (300 DPI)**

## 1-3. Printer Accessories

After unpacking, please check the accessories that come with the package, and store appropriately.

| | | |
|---|---|---|
| 109. Barcode printer | 110. Power cable (110V or 230V) | 111. Parallel cable |
| 112. Serial Cable (optional) | 113. USB Cable (Optional) | 114. Quick Start Guide |
| 115. Label Roll Sample | 116. Ribbon Roll Sample | 117. Empty Ribbon Roll |
| 118. CD (includes Software/Manual/Driver/DLL) | | |

## 1-4. General Specifications

| **Model** | **EZ-2200** | **EZ-2300** |
|---|---|---|
| **Resolution** | 203 dpi (8 dot/mm) | 300 dpi (12 dot/mm) |
| **Print Mode** | Thermal Transfer / Direct Thermal | Thermal Transfer / Direct Thermal |
| **CPU** | 16 Bit | |
| **Sensor Location** | Moveable, left aligned | |
| **Sensor Type** | Reflective, Transmissive | |
| **Sensor Detection** | Type: Label gap and black mark sensing.<br>Detection: Label length auto sensing and / or program command setting | |
| **Print Speed** | 50.8mm (2”)/sec ~ 152.4mm (6“)/sec | 50.8mm (2”) ~ 101.6mm (4”) |

| | | |
|---|---|---|
| **Print Length** | 1270mm (50”) | 558.8mm (22”) |
| **Print Width** | 25mm (1”) ~ 104 mm (4.09”) | 25mm (1”) ~ 105 mm (4.13”) |
| **Media** | Label Roll: Max. 203mm (8”)<br>Core Diameter: 38.1 mm (1.5”)~ 76.2 mm (3”)<br>Width: 25.0 mm (1“) ~ 118.0 mm (4.65”)<br>Thickness: 0.06~0.25mm | |
| **Ribbon** | Material: Transfer ribbons (wax, hybrid, and resin)<br>Type: Ink inside or ink outside<br>Length: 450M (1471 ft)<br>Width: 30mm ~ 110 mm (1.18” to 4.33”).<br>Inner Core Diameter: 25.4 mm (1”).<br>Ribbon Roll Diameter: 75 mm (2.95“). | |
| **Printer Language** | EZPL (downloadable) | |
| **Software** | Application: QLabel-III<br>DLL & Driver: Microsoft Windows 95, 98, Me, NT 4.0, 2000 and XP | |
| **Resident Fonts** | 9 resident alphanumeric fonts (included OCR A & B) those are expandable (8 times for EZPL) horizontally and vertically. All fonts in 4 directions rotation (0, 90, 180, 270 degrees), 6,8,10,12,14,18,24,30 points. | |
| **Fonts Download** | Windows Bit-map fonts and Asian fonts downloadable. All fonts in 4 directions rotation (0, 90, 180, 270 degrees). Asian fonts in 8 directions rotation. | |
| **Image Handling** | BMP, PCX, Support ICO, WMF, JPG, EMF file through software. | |
| **Barcode** | Code 39, Code 93, Code 128 (subset A,B,C), UCC 128, UPC A / E (add on 2 & 5), I 2 of 5, EAN 8 / 13 (add on 2 & 5), Codabar, Post NET, EAN 128, DUN 14, MaxiCode, PDF417 & Datamatrix Code | |
| **Interface** | Serial, Parallel, USB, PS2 keyboard wedge | |
| **Interface Transmission Speed** | Baud rate 300 ~ 38400, XON/XOFF, DSR/DTR | |
| **Memory** | Standard: 2MB Flash, 2MB DRAM<br>Optional: 2MB Flash | |
| **LCD Display** | Back-light Graphic LCD Display<br>Three bi-color LED lamps: Power, Ready, Error<br>Three Feed keys: Feed, Pause, Cancel | |
| **Power** | 100/240VAC, 50/60 Hz | |
| **Real Time Clock** | Time and date stamp | |
| **Environment** | Operation: 40°F to 104°F (5°C to 40°C)<br>Storage: -40°F to 122°F (-20°C to 50°C) | |
| **Humidity** | Operation: 30-85%, non-condensing. Free air.<br>Storage: 10-90%, non-condensing. Free air. | |
| **Cert. Approval** | CE, CUL, FCC Class A | |
| **Printer Dimension** | Length: 454.58 mm (17.9”)<br>Height: 277.30 mm (10.92”)<br>Width: 275.55 mm (10.85”)<br>Weight: 13 Kg | |
| **Options** | Cutter<br>Stripper with Internal Rewinder<br>2MB Flash memory module<br>Stand-alone keyboard (KP-180)<br>QR code | |

*Spcifications are subject to change without notice.*

## 1-5. Communication Interface

### Paralle Interface

Handshake : DSTB connects to the printer, BUSY connects to the host
Interface cable : Parallel cable compatible to IBM PC
Pin out : See below

| PIN NO. | FUNCTION | TRANSMITTER |
|---|---|---|
| 1 | /Strobe | host |
| 2-9 | Data 0-7 | host |
| 10 | /Acknowledge | printer |
| 11 | Busy | printer |
| 12 | /Paper empty | printer |
| 13 | /Select | printer |
| 14-16 | N/C | |
| 17 | Chassis Ground | |
| 18 | +5V max 500mA | |
| 19-30 | Signal Ground | |
| 31 | N/C | host |
| 32 | /ERROR | printer |
| 33 | Signal Groude | ground |
| 34-36 | N/C | |

Note: DCE: Data Communication Eqauipment (PC)
DTE: Data Terminal Equipment (Printer)

### Serial Interface

Serial Default Setting : 9600 baud rate、no parity、8 data bits、1 stop bit、XON/XOFF protocol and RTS/CTS。

Connector Type: DB9 female, pin assignment is as follows:

| PIN NO. | 1 | 2 | 3 | 4 | 5 | 6 | 7 | 8 | 9 |
|---|---|---|---|---|---|---|---|---|---|
| FUNCTION | +5 V | TXD | RXD | N/C | GND | N/C | CTS | RTS | N/C |

Serial interface from PC to printer

| PC(DTE) | | | | EZ-2000(DCE) |
|---|---|---|---|---|
| --- | 1 | | 1 | +5V |
| RXD | 2 | | 2 | TXD |
| TXD | 3 | | 3 | RXD |
| DTR | 4 | | 4 | N/C |
| GND | 5 | | 5 | GND |
| DSR | 6 | | 6 | N/C |
| RTS | 7 | | 7 | CTS |
| CTS | 8 | | 8 | RTS |
| --- | 9 | | 9 | N/C |

### USB Interface

Connector Type : Type B

| PIN NO. | 1 | 2 | 3 | 4 |
|---|---|---|---|---|
| FUNCTION | USBVCC | D- | D+ | GND |

**PS2 Interface**

| PIN NO. | 1 | 2 | 3 | 4 | 5 | 6 |
| --- | --- | --- | --- | --- | --- | --- |
| FUNCTION | DATA | N/C | GND | VCC | CLOCK | N/C |

PS2 interface from PC to printer

| PC | | | | EZ-2000 |
| --- | --- | --- | --- | --- |
| DATA | 1 | | 1 | DATA |
| N/C | 2 | | 2 | N/C |
| GND | 3 | | 3 | GND |
| VCC | 4 | | 4 | VCC |
| CLOCK | 5 | | 5 | CLOCK |
| N/C | 6 | | 6 | N/C |

## 1-6. Printer Parts

Please use the following diagrams to identify each printer part.

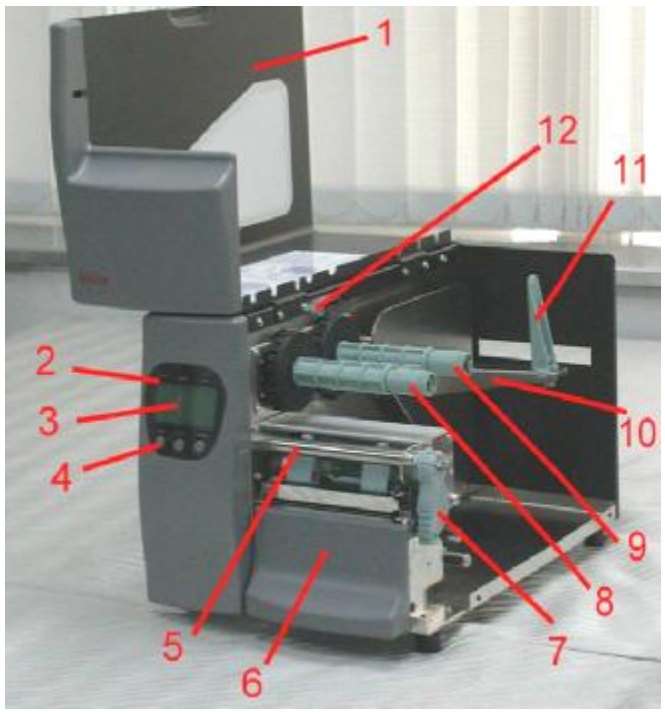


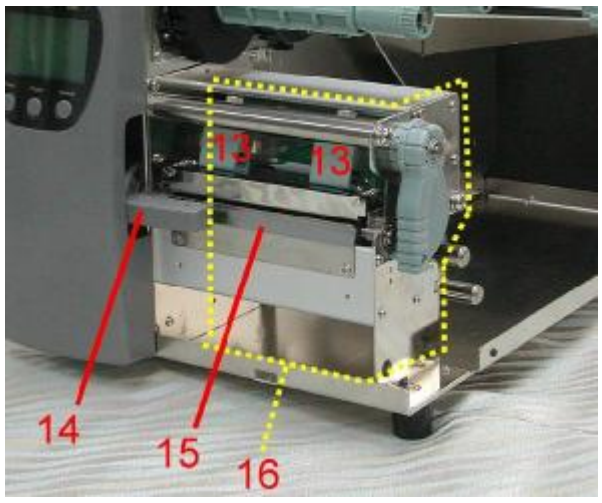


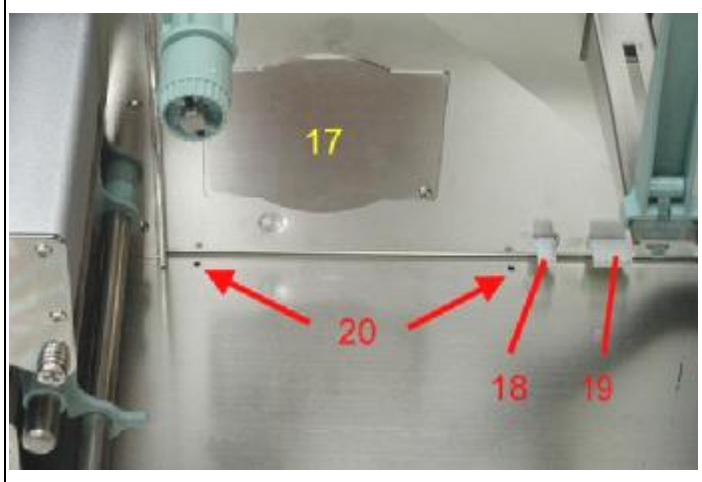


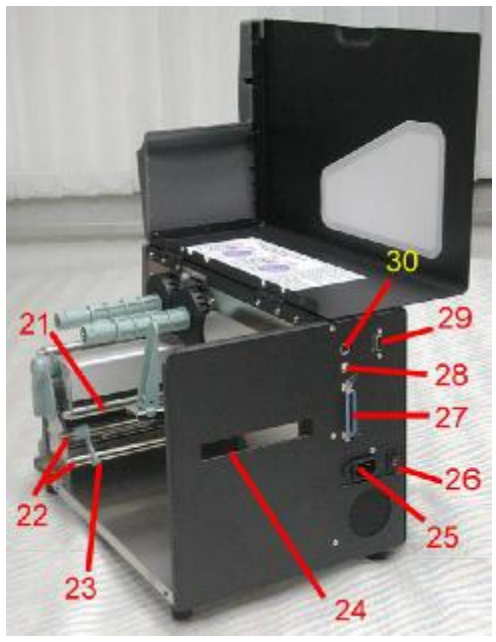


| | | | | | |
|---|---|---|---|---|---|
| 1 | Top Cover | 11 | Label Width Guide | 21 | Ribbon Feed Rod |
| 2 | Indicator Light | 12 | Ink Position Lever | 22 | Label Feed Rods |
| 3 | LCD Display | 13 | Print Head Spring Box | 23 | Label Feed Guide |
| 4 | Control Key | 14 | Stripper Sensor | 24 | Fan-Fold Label Insert |
| 5 | Ribbon Rod | 15 | Tear Off Bar | 25 | Power Socket |
| 6 | Bottom Front Cover | 16 | Printer Mechanism | 26 | Power Switch |
| 7 | Print Head Lever | 17 | Rewinder Option Cover Plate | 27 | Parallel Port |
| 8 | Ribbon Rewind Shaft | 18 | Rewinder Connector | 28 | USB Port |
| 9 | Ribbon Supply Shaft | 19 | Cutter Connector | 29 | Serial Port |
| 10 | Label Roll Bar | 20 | Cable Configuration holes | 30 | PS2 Port |

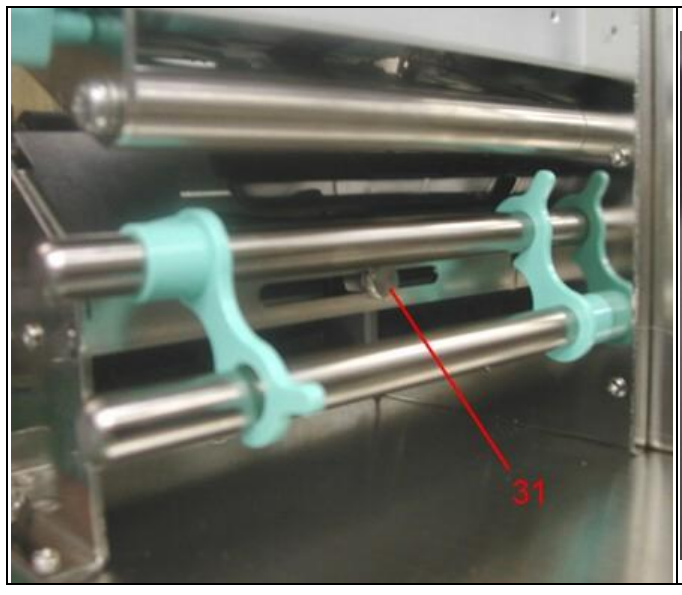


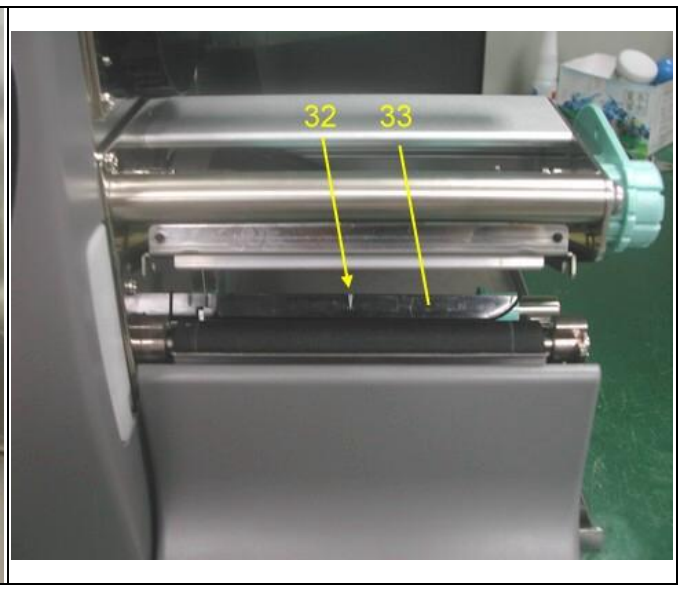

| | | | | | |
| --- | --- | --- | --- | --- | --- |
| 31 | Moveable Sensor Lever | 32 | Sensor Position Mark | 33 | Moveable Sensor |

# Chapter 2. Printer Installation

This printer model has the following print modes:

| | |
|---|---|
| Thermal Transfer (TT) : | When printing, ribbon must be installed to transfer the print contents onto the media |
| Direct Thermal (DT) : | When printing, no ribbon is necessary; it only requires direct thermal media. |

Please check the specific print mode, then go into the Setting Mode after power on the printer.

## 2-1. Ribbon Installation

| | |
|---|---|
| 1. Place the printer onto a smooth surface, and open the top cover. | |
| 2. Pull the Print Head Lever out and flip it upward to the right. | |
| 3. Take the used ribbon out of the ribbon supply shaft.<br><br>4. Place the new ribbon roll onto the ribbon supply shaft.<br><br>5. NPlace the empty ribbon roll onto the ribbon rewind shaft. | |
| 6. Feed the ribbon from the Ribbon Supply Shaft Rod under the Print Head.<br><br>*Note: DO NOT feed the ribbon under the moveable sensor.* | |
| 7. Wrap the ribbon around the Ribbon Shaft Rod and stick the ribbon onto the empty ribbon roll.<br><br>*Note: make sure the ribbon rewind direction is correct.* | |

| | |
|---|---|
| 8. Flip the Print Head Lever back to its original position.<br><br>9. Close the top cover to complete the ribbon installation. | 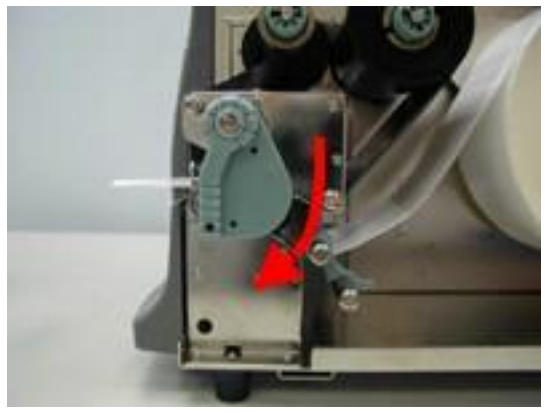 |

## 2-2. Ribbon Inside/Outside Installation

| | |
|---|---|
| 1. Ribbon outside (ink outside the roll). | 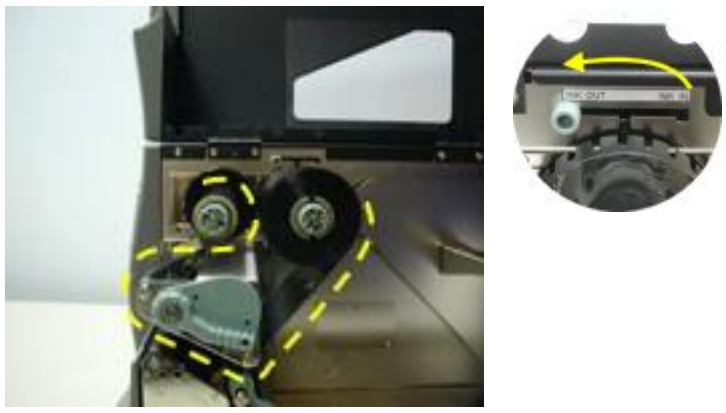  |
| 2. Ribbon inside (ink inside the roll). | 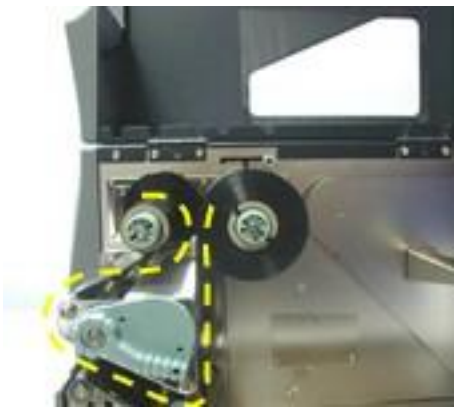 |

## 2-3. Label Installation

| | |
|---|---|
| 1. Place the printer onto a smooth surface, and open the top cover. | |
| 2. Place the label roll onto the Label Roll Bar, and align the label to printer's inner wall.<br><br>3. Align the label roll with the Label Width Guide. Avoid pushing the guide too far in to damage the label edge. | |
| 4. Pull the Print Head Lever out and flip it upward to the right. | 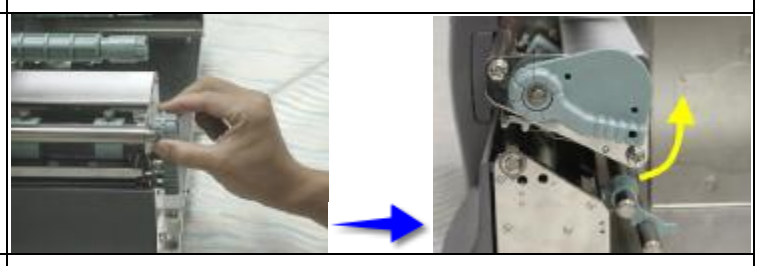 |
| 5. Flip the Label Feed Guide upward. | |
| 6. Feed the label through the two Label Feed Rods (under the moveable sensor) to the Tear-off Bar. | 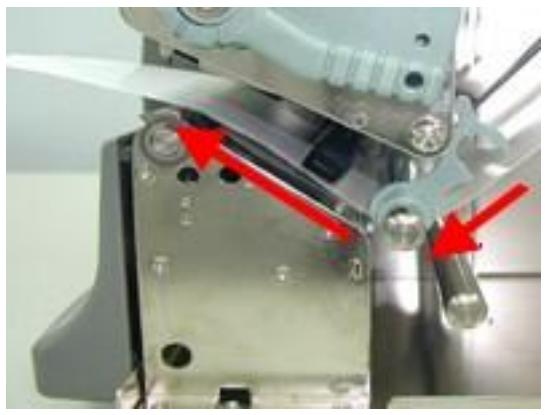 |
| 7. Align the label edge inward, and adjust the Label Feed Guide with the label.<br><br>8. Flip the Label Feed Guide back down to its original position, and clip the guide in position. | 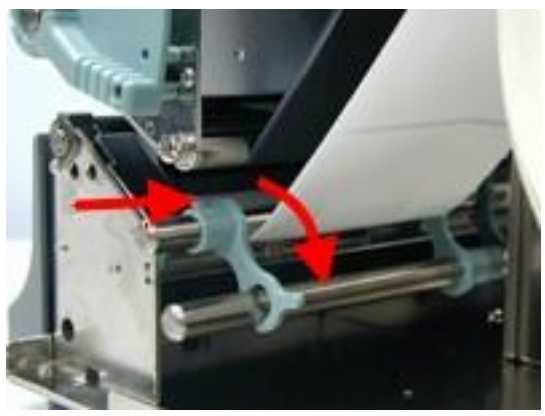 |

| | |
|---|---|
| 9. Flip the Print Head Lever back to its original position.<br><br>10. Close the top cover to complete the label installation. | 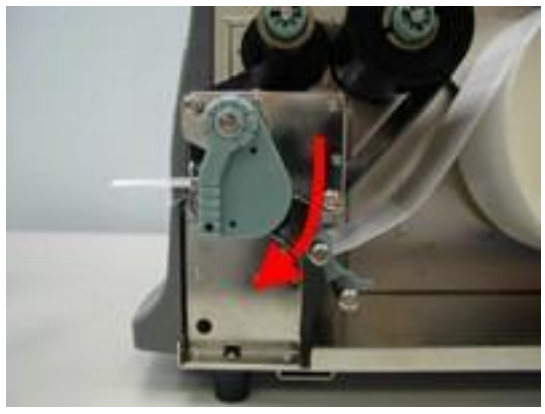 |

## 2-4. USB Installation

1. USB is a Plug & Play facility. Once the USB cable is connected from PC to the printer, PC will automatically detect the new device and begin the installation process.

2. Select " Search for al suitable driver for my device [recommended]." and click "Next"

3. Select the location of the driver.

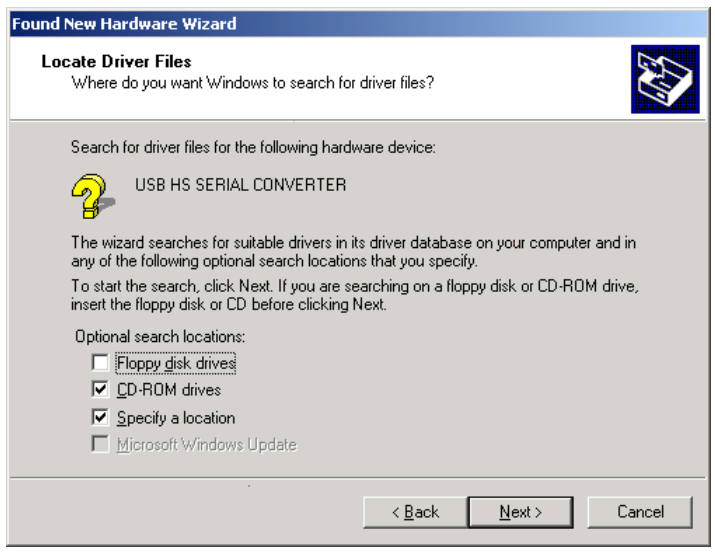


4. When the USB device driver is assigned and saved, click "Next"

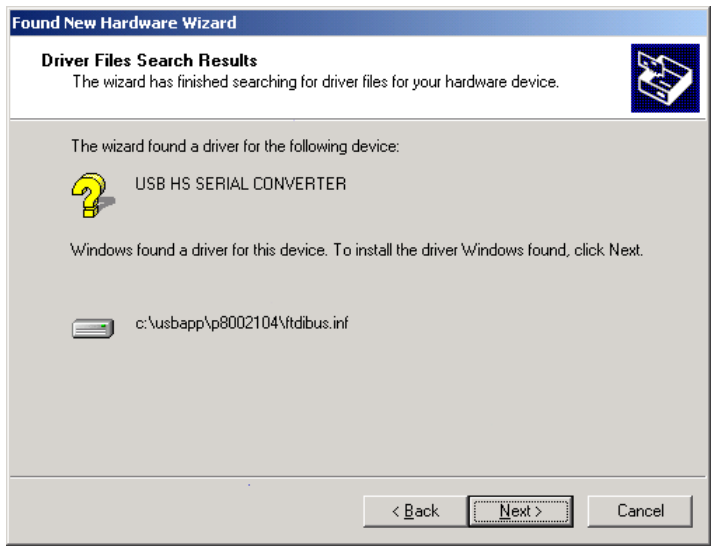

5. The USB device is built on the serial port, therefore make sure the interface setting is specified to the assigned port.

6. Go to Control Panel\System\Device Manager and the USB port will be listed under Ports (COM & LPT). The example from the right hand side indicates that the USB Serial Port is COM3.

7. After the USB driver is installed, the USB device can be used through software (such as QLabel III or Godex drivers) to print labels.

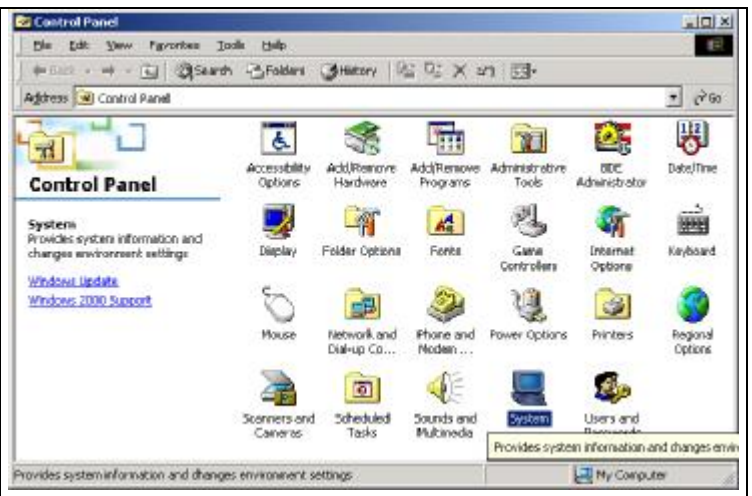


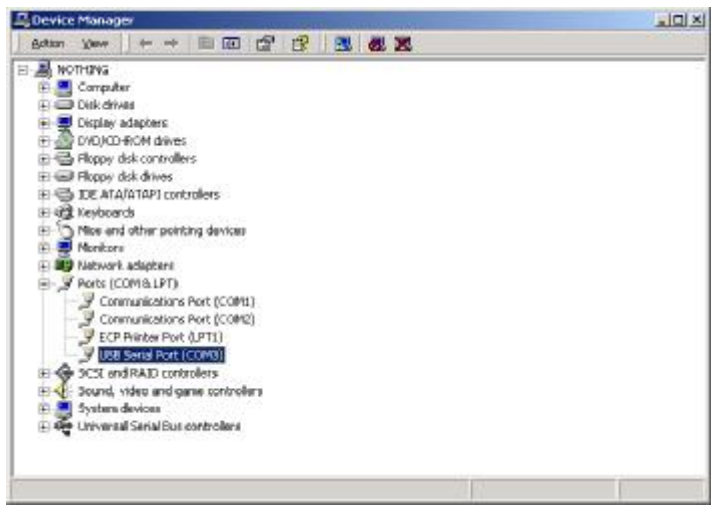


## 2-5. USB Uninstallation

To remove the USB driver, open “USB Driver” folder and execute the “Ftdiunin” program, the message box on the right hand side will appear. Click “Continue” to remove the USB driver.

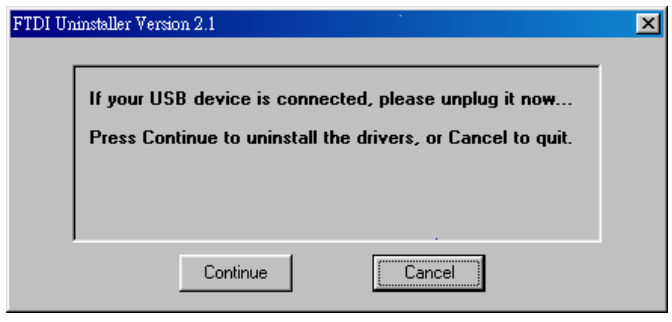

## 2-6. PC Connection

1. Please make sure the printer is powered off.
2. Take the power cable, plug the cable switch to the power socket, and then connect the other end of the cable to the printer power socket.
3. Connect the cable to the parallel port on the printer and on the PC.
4. Power on the PC.  LCD display would show the printer model and F/W version.

*【Remark】: If you wish to connect with an USB interface, please install the USB driver first.*

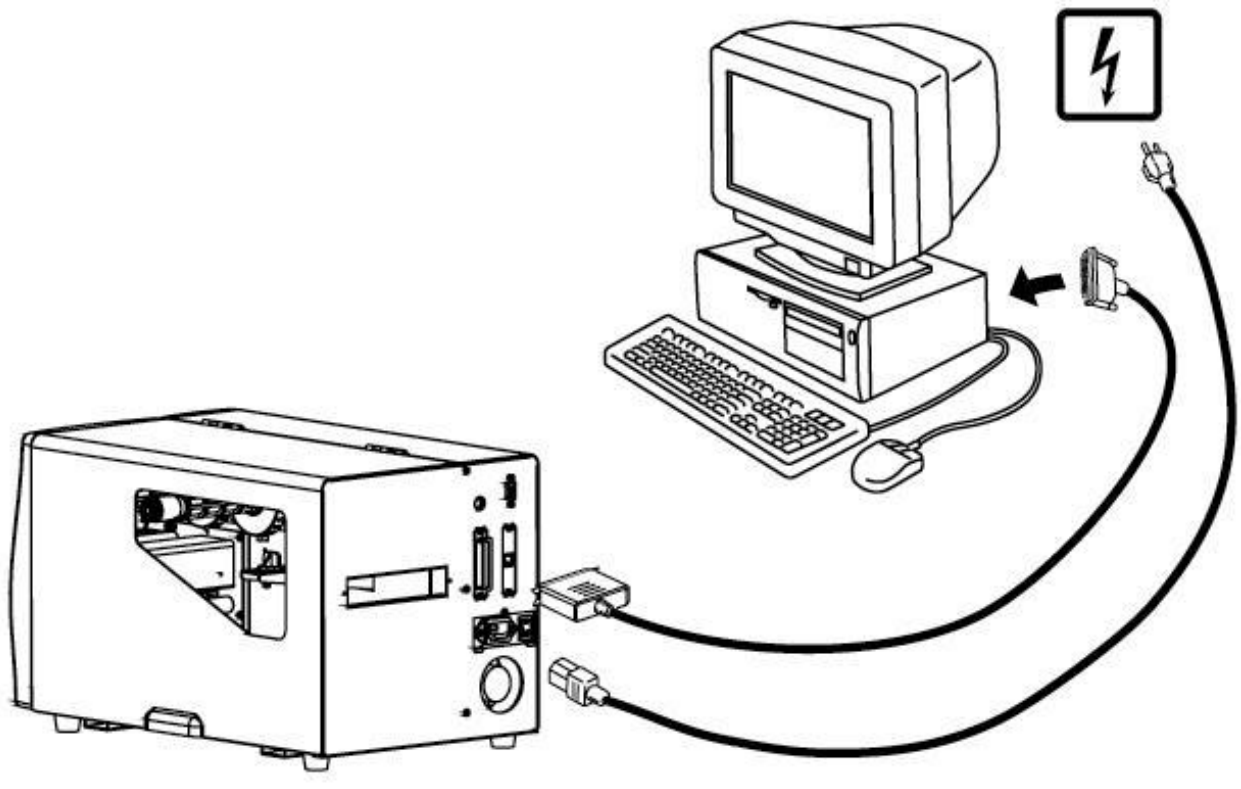

# Chapter 3

## 3-1. Stripper and Internal Rewinder Parts

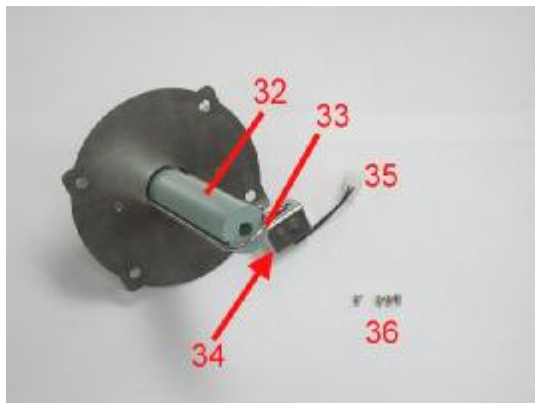


| | | | | | |
|---|---|---|---|---|---|
| 31 | Bottom Cover Screw | 32 | Liner Rewind Shaft | 33 | U Shape Clip |
| 34 | Max. Liner Rewind Sensor | 35 | Rewinder Cable Connector | 36 | Screws |

## 3-2. Stripper and Rewinder Installation

| | |
|---|---|
| 1. Face the printer front, and unscrew the Bottom Cover Screw.<br>2. Remove the Bottom Front Cover. | |
| 3. Open the Top Cover of the printer, and turn the printer sideways.<br><br>4. Remove the Rewinder Option Cover Plate. | 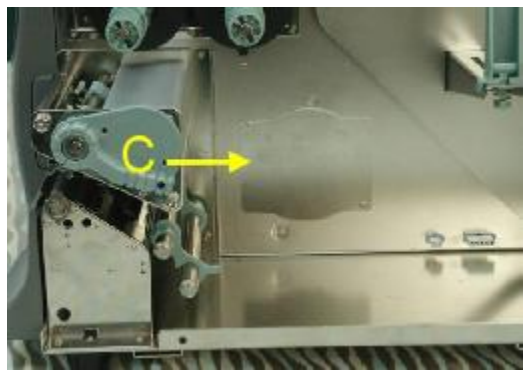 |
| 5. Install the Rewinder unit.<br><br>6. Take off the U Shape Clip from the Liner Rewind Shaft, and then screw the Rewinder unit onto the printer. | 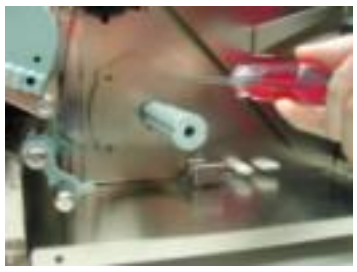 |
| 7. After the Rewinder is installed, plug the Rewinder Cable Connector onto the Rewinder Connector. | 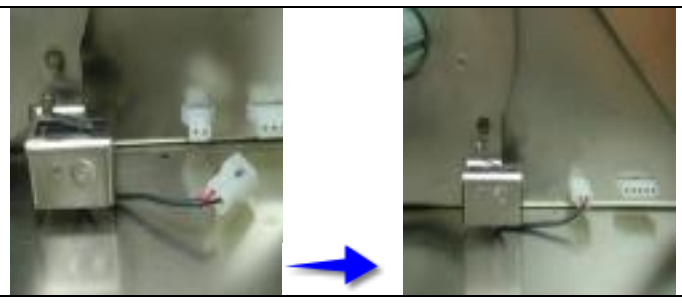 |
| 8. Install the media into the printer (see 2-1. Ribbon Installation and 2-3. Label Installation) | |

| | |
|---|---|
| 9. Peel off a few labels from the liner (about 400mm of liner), then feed the liner through the Printer Mechanism and around the Label Feed Guide.<br><br>10. Wrap the liner around the Liner Rewinder Shaft, and use the U Shape Clip to secure e liner.<br><br>*Note: make sure the liner rewind direction.* | 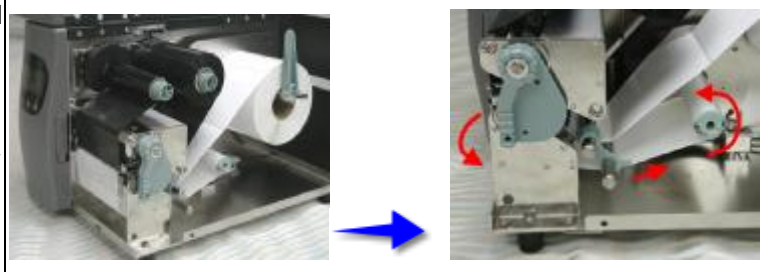 |
| 11. Screw the Bottom Front Cover back onto the printer. | |
| 12. Press lower part of the Stripper Sensor to flip it open.<br><br>13. Flip the Stripper Sensor to the sensor detect position, then close the Top Cover.<br><br>14. When the liner rewinds to about 110mm in diameter, the liner roll will touch the Max. Liner Rewind Sensor and the printer will stop printing until liner has been removed from the printer.<br><br>*Note1: make sure the printer is set to have the stripper function on.*<br>*Note2:The label / paper used for rewinding purposes is suggested to be at least 30mm in height, and 100mm at the most.* | 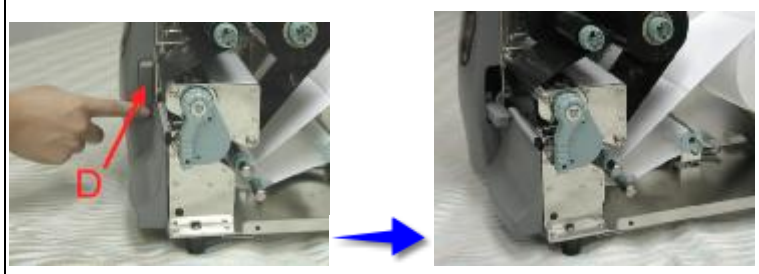 |

## 3-3. Cutter Parts

| | |
|---|---|
| 37 | Cutter Cover |
| 38 | Cutter |
| 39 | Cutter Cable Connector |
| 40 | Screws |

## 3-4. Cutter Installation

| | |
|---|---|
| 1. Face the printer front, and unscrew the Bottom Cover Screw.<br><br>2. Remove the Bottom Front Cover. | |
| 3. Open the Top Cover and remove the Tear Off Bar.<br><br>4. Remove the two screws in the front. | 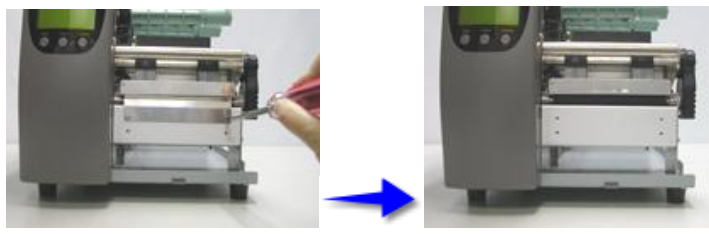 |
| 5. Hold the cutter and secure the cutter kit onto the printer. | |
| 5. Plug the Cutter Cable Connector onto the Cutter Connector. | |
| 6. Tie the cables with the secure locks, and fix the locks into the Cable Configuration Holes. | |

| | |
|---|---|
| 7. Screw the Cutter Cover onto the cutter kit.<br><br>8. Install the media into the printer (refer to 2-1 for Ribbon Installation and 2-3 for Label Installation). Close the Top Cover to complete the cutter installation.<br><br>*Note1: make sure printer is set to have the cutter function on.*<br>*Note2: The label / paper used for cutting is suggested to be at least 30mm in height.* | |

# Chapter 4. Control Panel

## 4-1. LCD/LED Messages

| LCD Message Display | LED Light | | | Beep | Description |
|---|---|---|---|---|---|
| | Power | Ready | Error | | |
| EZ-XXXX Vx.xxx | Green | Green | | 1 | EZ-XXXX: printer model; Vx.xxx: current F/W version |
| Self Test | Green | Green | | 3 | Printer is in Self-Test Mode. Please refer to page 54 for more information. |
| Now in Dump Mode | Green | Green | | 3 | Printer is in Dump Mode. Please refer to page 54 for more information. |
| Auto Sensing mode | Green | | | 3 | Printer is in Auto Sensing Mode. Please refer to page 55 for more information. |
| EZ-XXXX Pause | Green | Green | | | Printer has paused, press Pause key again to continue printing. |
| Print job is cancelled | Green | Green | | | Cancel key pressed, stopping all the print jobs and clear the printer data. |
| Press feed key to continue print job | Green | | Red | | Press the Feed key to allow printer to continue with the existing actions. |
| PROGRAM LOADING | Green | | Red (Flash) | | Printer is downloading the firmware. |
| LOADING COMPLETE | Green | Green | | 1 | Firmware has been successfully downloaded. |
| Setting Mode | Green | Green | | 1 | Printer is currently in the Setting Mode. Please refer to page 56 for more information. |

## 4-2. General Operation

### Pause Key

When pressing the Pause key in standby mode, the printer will go into the Pause Mode, and LCD Display will indicate “EZ-xxxx Vx.xxx Pause.” At this time, printer won’t be able to receive any command; but when pressing the Pause key once again, the printer will get out of the Pause mode and go back to standby.

Pressing the Pause key while printing, printer will pause the print job, when the Pause key is pressed one more time, the printer will continue with the rest of the print job. For example, if the print job contains 10 labels, press the Pause key after 2 labels are printed to stop printing; when pressing the Pause key again, printer will finish printing the remaining 8 labels.

### Cancel Key

When pressing the Cancel key while printing, the LCD Display will show “xxxxxxxx Cancel,” this means the printer cancels the current print job. For example, if the print job contains 10 labels, press the Cancel key after 2 labels are printed, the remaining 8 labels won’t be printed, and the printer goes back to standby.

### Feed Key

When pressing the Feed key, printer will send the media (according to media type) to the specified stop position. When printing with continuous media, when pressing the Feed key, the printer will feed media out to a certain length. When printing labels, pressing the Feed key, the printer will feed one label at a time; if the label is not sent out in a correct position, then please proceed with the Auto Sensing (see page 14).

## 4-3. Self-Test

The Self-Test function in a printer will help the user to troubleshoot whether the printer is operating normally. In the Self-Test Mode, the printer will print out a test sample each time when the Feed key is pressed. To stop the Self-Test procedure in the middle, simply power off the printer. Below is the Self-Test procedures:

8. Power off the printer, press and hold the Feed key.
9. Power on the printer (while still holding the Feed key), release the Feed key after hearing 3 beeps.

After about 1 second, printer would automatically print out the following, and the LCD Display would show “Self Test.” This means the printer is operating normally.

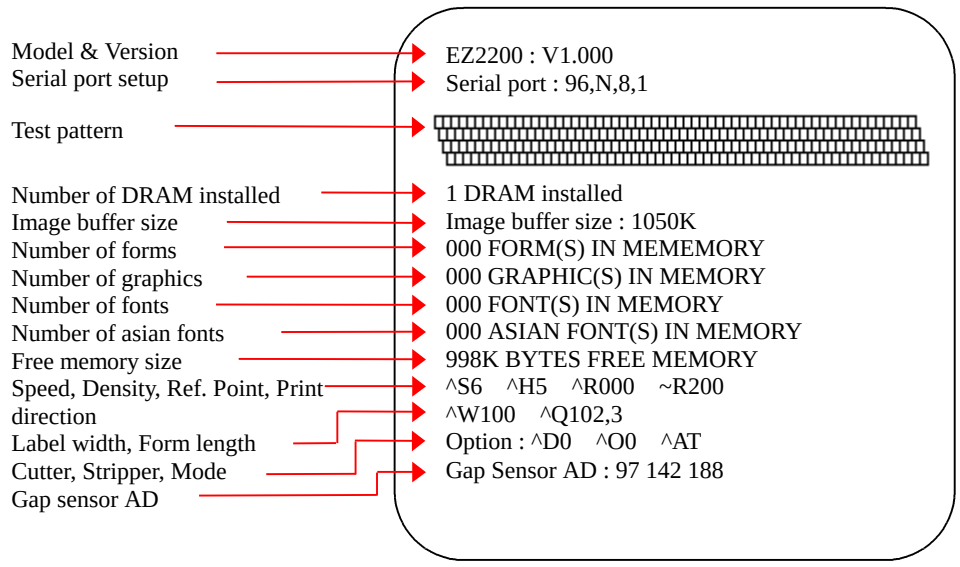


Self-Test includes the internal printer data setting.

## 4-4. Dump Mode

When label setting and the print result don’t match, it’s recommended to go into the Dump Mode to check whether there’s a mistake in data transmission between the printer and the PC. For example, when printer receives 8 commands, yet without processing these commands, only printed out the contents of the commands, this will confirm whether the commands were received correctly. Test procedures to enter the Dump Mode is as follows:

10. Power off the printer, press and hold the Feed key.
11. Power on the printer (while still holding the Feed key).
12. When LCD Display shows “DUMP MODE BEGIN,” release the Feed key. Printer will automatically print “DUMP MODE BEGIN.” This means the printer is already in Dump Mode.
13. Send commands to the printer, and check to see if the print result matches the commands sent.

*【NOTE】: to cancel (get out of the Dump Mode), press the Feed key, this time printer will automatcially print out “OUT OF DUMP MODE.” This indicates that printer is back in the standby mode. Or power off to exit the Dump Mode.*

## 4-5. Auto Sensing

Printer can automatically detect label (black mark paper) length and record. This way, without setting the print length, the printer can accurately detect the label (black mark) positions.

14. Check if the Moveable Sensor Mark is located at the right sensing position.
15. Power off the printer, press and hold the Pause key.
16. Power on the printer (while still holding the Pause key), after printer beeps 3 times and the LCD Display shows “Auto Sensing mode,” release the Pause key. Printer will automatically detect the label size/length and record.
17. LCD Display shows the results of measurement.

Printer goes back to standby mode after displaying the measurement.

## 4-6. Setting Mode

In the Setting Mode, changes can be made according to requirement on the printing mode, options, media type, and parallel interface (printer can only go into setting when connected to PC by parallel cable, USB cable, or serial cable).

18. Install label and ribbon according to the Ribbon & Label Installation Diagram, and make sure the Ready light turns green.
19. Press and hold the ”Pause” key, then press the ”Feed” key, hold these two keys, and the LCD Display will show ”Setting Mode.”
20. Release the keys to enter the “Setting Mode,” and it will show the setting items.
21. In the Setting Mode, the keys have the following functions:

    **Feed Key : Selection**
    **Pause Key : Enter or confirm**
    **Cancel Key : Exit**

22. Items with the ”＊” sign is of option items.
23. Before exiting the Setting Mode, printer will prompt user whether to save the settings.

After user’s reponse on whether or not to save the settings, printer will return to standby mode.

| | |
|---|---|
| **Printing mode :** | **Thermal Transfer:** when printing, a ribbon must be installed to transfer the print contents onto the media.<br>**Direct Thermal:** when printing, no ribbon is necessary, it only requires direct thermal media. |
| **Option Set :** | **Stripprt mode:** turn on the stripper function<br>**Cutter mode:** turn on the cutter function<br>**Option OFF:** select this option to turn off the stripper and cutter functions. This is the default setting. |
| **Paper Set :** | **Black Mark:** for label or plain paper with black mark in the back<br>**Gap Paper:** for labels with liner and gap, or hang tags. The default is set to be gap paper.<br>**Plain Paper:** for plain paper |
| **COM Port Set :** | **Baud Rate:**<br>300/ 600/ 1200/ 2400/ 4800/ 9600/ 19200/ 38400 bits, default: 9600 bits<br>**Parity Set:**<br>None / Odd / Even Parity, default: None Parity<br>**Data Lengh:**<br>7 / 8 bits, default: 8 bits<br>**Stop bit:**<br>1 / 2 bits, default: 1 bit |
| **Auto Sensing** | **Auto mode:** auto sense the label type (black mark, gap & plain paper) and length<br>**Gap mode:** detects gap paper<br>**Black mode:** detects black mark label |
| **Setting Review:** | Review setting items |
| **LCD Language** | English<br>Simplied Chinese<br>Traditional Chinese |

*【NOTE】:*

*(1) “Default Setting” is the original setting from the factory, if other changes are made on the settings, then follow the new settings.*

*(2) Printer will store the previous settings after power off, thus if settings are to be changed again, please enter the Setting Mode to reset.*

## 4-7. Error Messages

LCD Display wasn't installed in position or other problems occur, printer will beep 2 times as warning, and error messages will be displayed.

| LCD Message Display | LED Message Light | | | Beep | Description | Solution |
|---|---|---|---|---|---|---|
| | Power | Ready | Error | | | |
| Print Head is opened | Green | | Red | 4 beeps twice | Thermal Print Head not firmly in place. | Re-open Thermal Print Head and make sure it closes tightly. |
| Entering the Cooling Process | Green | | Red | | Thermal Print Head temperature high. | Printer goes back to standby mode after cooling. |
| Out of ribbon or check ribbon sensor | Green | | Red | 3 beeps twice | Ribbon not installed, and printer shows error message. | Make sure the printer is in the Direct Thermal mode. |
| | | | | | Ribbons used up or ribbon supply shaft not moving. | Replace with new ribbon roll. |
| Out of media or check media gap sensor | Green | | Red | 2 beeps twice | Unable to detect paper. | Make sure the movable sensor mark is at the correct position, if the sensor is still unable to detect paper, then go throught Auto Sensing again. |
| | | | | | Label used up or label sensor can't detect paper. | Replace with new label roll. When label sensor can't detect paper, please perform Auto Sensing. |
| Check paper setting | Green | | Red | 2 beeps twice | Abnormal paper feed. | Possible causes: card tags, paper falling into the gap behind the platen roller, can't find label gap/black mark, black mark paper out. Please adjust according to actual usage. |
| Command is not recognized | Green | | Red | 2 beeps twice | Wrong command | Check printer commands, possible value missing or errors. |
| Memory is full | Green | | Red | 2 beeps twice | Memory is full | Delete unnecessary data in the memory or have memory expansion (options) |
| Filename can not be found | Green | | Red | 2 beeps twice | Can't find the file | Use "~X4" command to print out all the files, then check whether the file exist and the names are correct. |
| Filename is repeated | Green | | Red | 2 beeps twice | File name is repeated | Change the file name and download again. |

# Chapter 5. Maintenance and Adjustment

## 5-1. Thermal Print Head Cleaning

Unclear printouts (some parts unable to print) may be caused by dusty print head, ribbon stain, or label liner glue, therefore when printing, it's necessary to keep the top cover closed. Also, check and prevent paper/label from being stained or dusty to ensure print quality and to prolong the print head life. Print head cleaning instructions are as follows:

1. Open top cover.
2. Take out the ribbon.
3. Open the print head by lifting the Print Head Lever.
4. If on the print head (see yellow arrow) there's label pieces or other stain, please use a soft cloth with industrial use alcohol to wipe away the stain.

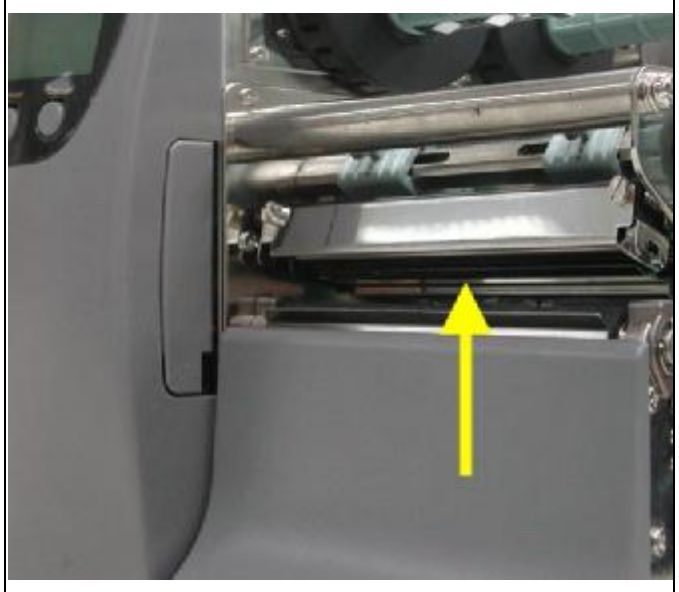

*Note:*
*(1) Weekly cleaning on the print head is recommended.*
*(2) When cleaning the print head with soft cloth, make sure it does not have any metal or hard particles attached on it.*

## 5-2. Thermal Print Head Balance Adjustment

When printing with different label materials or using different ribbon types, unbalanced print quality may occur due to the media material differences, thus it's necessary to adjust the Thermal Print Head pressure.

1. Open top cover.
2. Take out the ribbon.
3. Open the Thermal Print Head by lifting the Thermal Print Head Bar Handle.

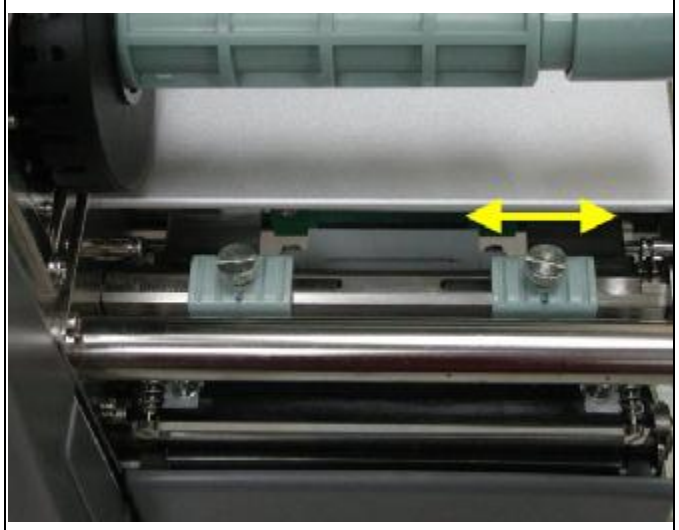

Move the Thermal Print Head Balance Box on the right side to change the print position. Normally, the wider the paper, the right Thermal Print Head Balance Box is farther to the right (out); the narrower the paper, the right Thermal Print Head Balance Box is farther to the left (in).

## 5-3 Pressure Adjustment

| | |
|---|---|
| 1. Open the top cover. | |
| 2. Pull and flip the TPH Lever counterclockwise to open the TPH. | |
| 3. One side of the printout not being printed clearly or ribbon wrinkle occurs, adjust the TPH Spring Box position or pressure to cure the problem. | 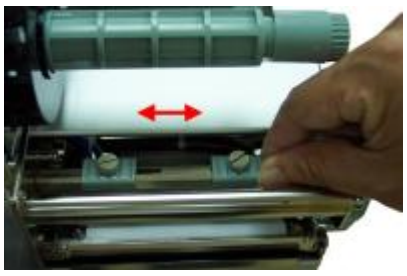 |
| 4. To adjust the TPH Spring Box pressure, use a flat tip screwdriver to turn the screw clockwise to increase the pressure, counterclockwise to decrease the pressure. | |

## 5-4 PH Print Line Adjustment

| | |
|---|---|
| 1. Open the top cover. | |
| 2. Pull and flip the TPH Lever counterclockwise to open the TPH. | |

| | |
|---|---|
| 3. Use the flat tip screwdriver to loosen the TPH screws (A) on each side of the print head counterclockwise for one circle (as indicated by the arrows) | 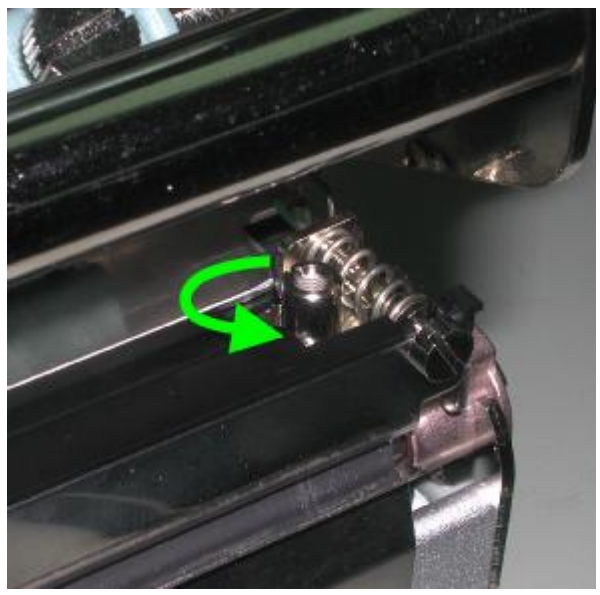 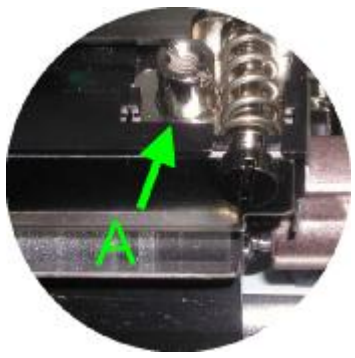  |

4. TPH print line adjustment

(1) When printing stiff or thick paper, the print line needs to be moved forward (paper feed direction) in order to achieve better printing quality. Use a flat tip screwdriver (as shown in the photo), and turn the screws (B) clockwise to move the TPH forward.

(2) TPH position adjustment for the left and right screws(B) need to be identical to make sure that the print line and the roller platen are parallel to each other.

(3) Turning the screws(B) one circle ,the TPH will move 0.5mm ,it is recommended to adjust by a quarter of a circle each time to fully control the printing quality and status.

(4) If in the midst of adjusting the TPH position,please slowly turn the screws (B)counterclockwise all the way to the end using a flat tip screwdriver.And start making the adjustment from the Beginning.

**NOTE:DO NOT makeTPH print line adjustment before the TPH screws(A) are turned loose.**

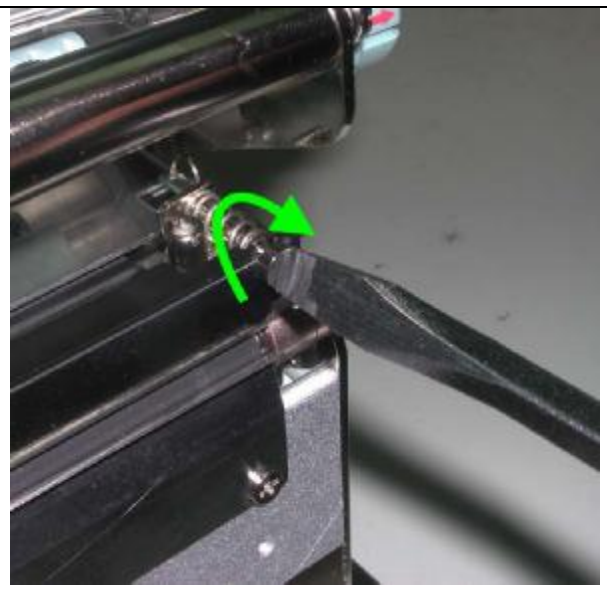

5. After the TPH print line adjustment is completed, use the flat tip screwdriver to tighten up the TPH

| | |
|---|---|
| screws (A) clockwise (as indicated by the arrows). | |

## 5-5 Label Width Guide Operation Instruction

| | |
|---|---|
| 1. Open the top cover. | |
| 2. Flip down the Label Width Guide to make it parallel to the Label Roll Bar. | 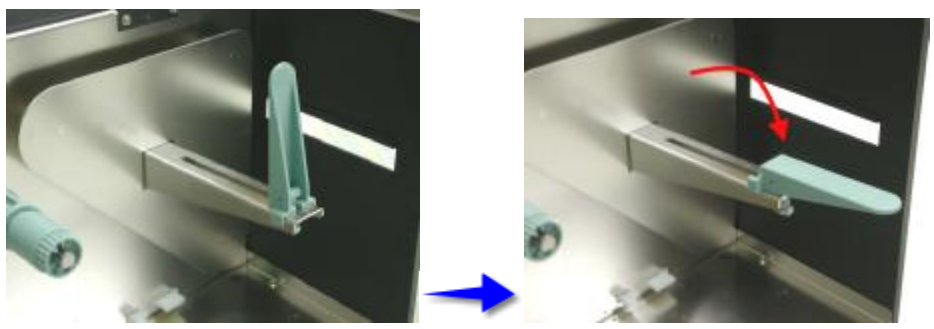 |

| | |
|---|---|
| 3. Place the label roll onto the Label Roll Bar,then flip back the Label Width Guide. | 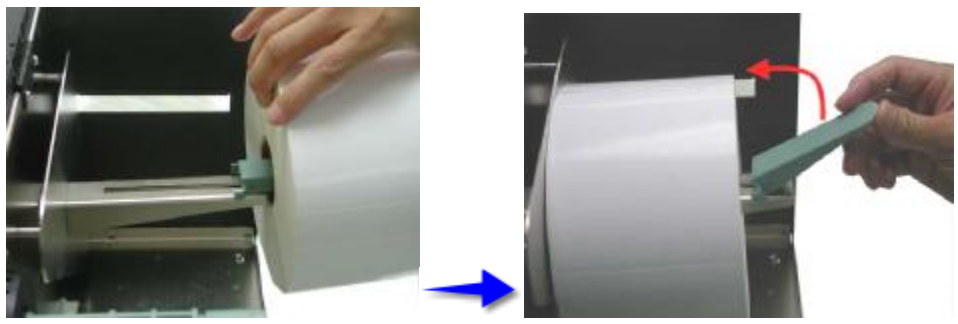 |
| 4. After the label roll is installed,push the Label Width Guide inward to secure the label roll. | 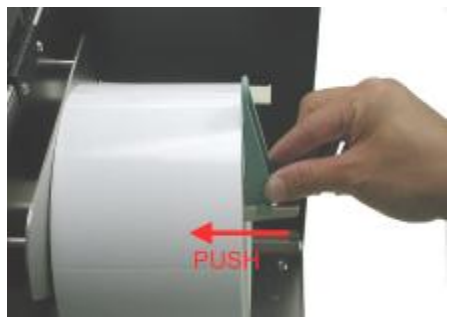  |

## 5-6. Ribbon Tension Adjustment

| | |
|---|---|
| Due to differences in the ribbon material, if ribbon wrinkles occur during printing, please adjust the ribbon expansion by turning the ribbon shaft clockwise to increase the expansion.<br><br>If a narrower ribbon is being used (especially ribbon width less than 2”), and printer might have problem pulling the labels. This time, please adjust the ribbon expansion by turning the ribbon shaft counterclockwise to decrease the expansion. | 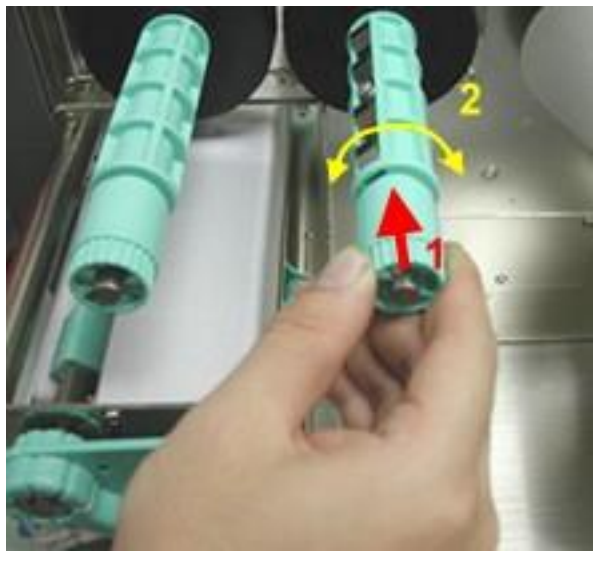  |

## 5-7. Cutter

| | |
|---|---|
| 1. There are two holes (as marked “A”)on the sides of the cutter<br><br>2. When paper jams and cutter malfunctions, power off the printer. Use 3mm hexagon screwdriver to turn the cutter blade clockwise.<br><br>3. After the paper jam is cleared, power on the printer, and the cutter blade will go back to its original position.<br><br>*Note: The label / paper used for cutting is suggested to be least 30mm in height.* | 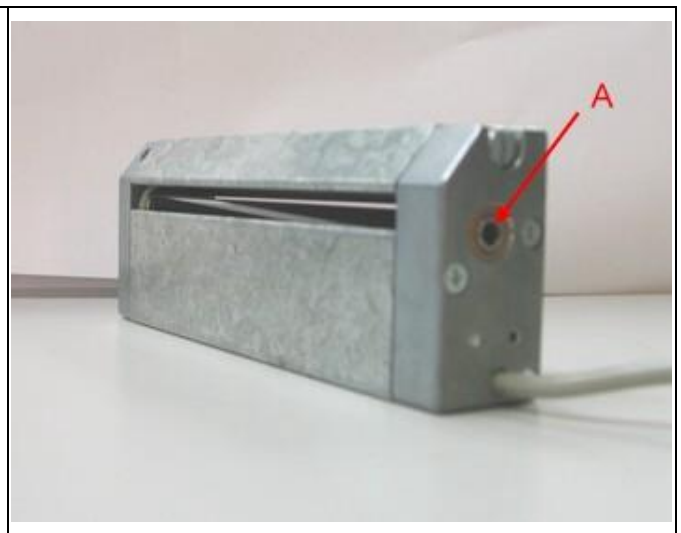  |

## 5-8. Troubleshooting

| Problem | Recommended Solution |
| --- | --- |
| LCD Display shows no message after power on the printer | • Check the power cable |
| LED light turns red (power/status) after printing stops | • Check for software setting or program command errors<br>• Replace with suitable label or ribbon<br>• Check if label or ribbon is all out<br>• Check if label is jammed/tangled up<br>• Check if mechanism is closed (Thermal Print Head not positioned correctly)<br>• Check if sensor is blocked by paper/label<br>• Check for abnormal cutter function or of no actions (if cutter is installed) |
| Printing started, but nothing was printed on the label | • Check if label is placed upside down or if label is not suitable for the application<br>• Select the correct printer driver<br>• Select the correct label and print type |
| When printing, label is jammed/tangled up | • Clean the label jam, and if label is stuck on Thermal Print Head, please remove it by using soft cloth with alcohol. |
| When printing, only part of the contents were printed | • Check if label or ribbon is stuck on the Thermal Print Head<br>• Check if application software has errors<br>• Check if start position setting has errors<br>• Check if ribbon has wrinkles<br>• Check if ribbon supply shaft is creating friction with the platen roller. If the platen roller needs to be replaced, please contact your reseller for more information<br>• Check if power supply is correct |
| When printing, part of the label wasn't printed completely | • Check if Thermal Print Head is stained or dusted<br>• Use internal command "~T" to check Thermal Print Head can print completely<br>• Check the media quality |
| Printout not in desired position | • Check if sensor is covered by paper or dust<br>• Check if liner is suitable for use, please contact reseller for more information<br>• Check if label roll edge is aligned with Label Width Guide |
| When printing, page skipping occurs | • Check if error occurs on label height setting<br>• Check is sensor is covered by dust |
| Unclear printout | • Check print darkness setting<br>• Check if Thermal Print Head is covered with glue or stain |
| When using cutter, label wasn't cutted straight | • Check if label is set up straight |
| When using cutter, label wasn't cutted successfully | • Check whether label thickness exceeds 0.16mm |
| When using cutter, label couldn't feed or abnormal cutting occurs | • Check if cutter is installed properly<br>• Check if Paper Feed Rods are sticky |
| When using stripper, abnormal function occurs | • Check if stripper sensor is covered with dust<br>• Check if label is installed properly |

*Note: if further problems shall occur, please contact your distributor for more information.*

### 2.3 EZ-2000 TPH Pressure Adjustment

| | |
|---|---|
| 1. Open the top cover. | |
| 2. Pull and flip the TPH Lever counterclockwise to open the TPH. | 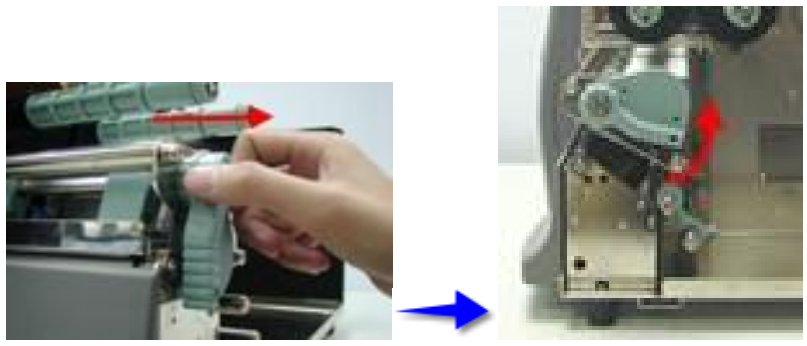 |
| 3. One side of the printout not being printed clearly or ribbon wrinkle occurs, adjust the TPH Spring Box position or pressure to cure the problem. | 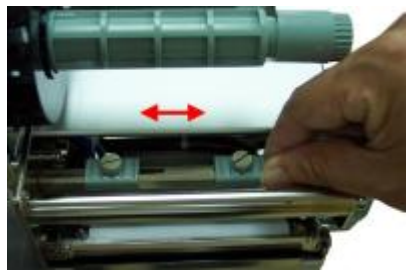 |
| 4. To adjust the TPH Spring Box pressure, use a flat tip screwdriver to turn the screw clockwise to increase the pressure, counterclockwise to decrease the pressure. | |

## 3.1 EXDLODE DIAGRAM

3.1.1 EZ-2100 FINISHED UNIT

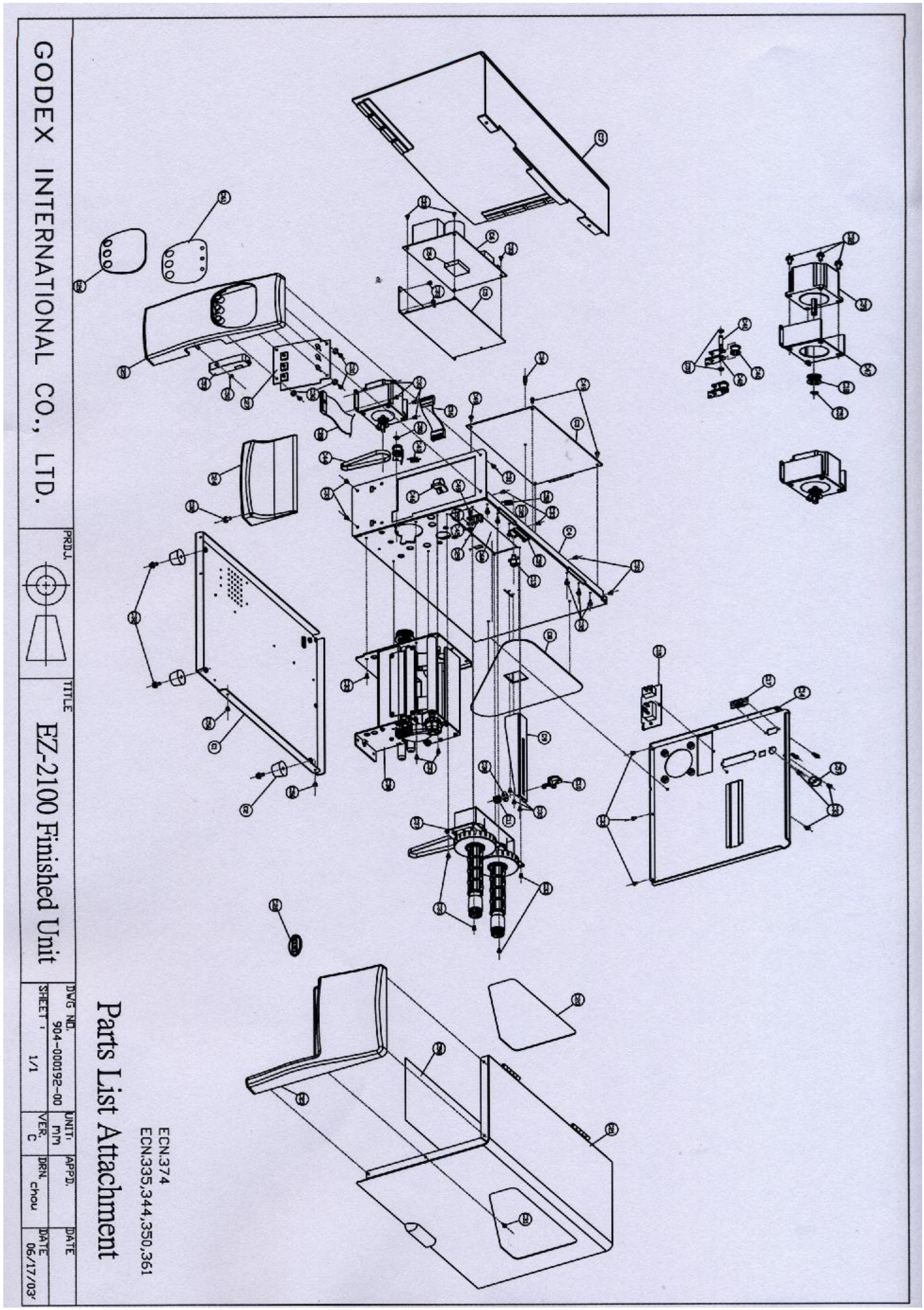

# PART LIST TABLE

**MODEL: EZ-2100** **Data:6-17-2003** **REV:C** DWG No.904-000192-00

| Item | Godex No. | Part Name | Chinese Part Name | Q'ty | Remark |
|---|---|---|---|---|---|
| | | **EZ-2100 Finished Unit** | | | |
| 1 | 710-029300-00 | Base Plate | 底板 | 1 | |
| 2 | 703-028400-00 | Rubber Foot | 腳墊 | 4 | |
| 3 | 160-000102-20 | MAIN PCB ASS'Y | 主機板組合 | 1 | |
| 4 | 710-034900-01 | Middle Wall Plate | 中間隔板/ez-2100 | 1 | ECN.361 |
| 6 | 422-010006-00 | Switching Power (UPS110-1241-1) | 交流式穩壓整流器 | 1 | |
| 5 | 710-028200-00 | Power Bracket | 電源支架 | 1 | |
| 7 | 710-030200-01 | Left Cover | 左側上蓋 | 1 | ECN.361 |
| 8 | 710-028800-00 | Paper Roll Plate | 紙捲檔板 | 1 | |
| 9 | 710-028700-00 | Label Roll Bar | 紙捲架 | 1 | |
| 10 | 700-032000-00 | Label Roll Guide | 紙捲調整桿 | 1 | |
| 11 | 712-028200-00 | Label Roll Guide Spring §1.0*7.0*15L*5N | 紙捲調整桿固定彈簧 | 1 | |
| 13 | 700-032200-00 | Ribbon Position Lever | 碳帶內外捲調整鈕 | 1 | |
| 14 | 710-029500-00 | Back Cover | 後飾板 | 1 | |
| 15 | 142-000016-02 | Power Switch ASS'Y | 開關固定板組合 | 1 | ECN.335 |
| 16 | 601-060009-05 | Power Cable-Main PCB | 連接線 power-主板 | 1 | |
| 17 | 601-000021-00 | RS232 | RS232 | 1 | |
| 18 | 701-001500-01 | 22T Gear (Double Hub) | 22T 皮帶輪(雙邊凸緣) | 1 | |
| 20 | 705-001700-00 | Acrylic Plate | 透明壓克力 | 1 | |
| 21 | 710-030300-01 | Right Cover No.KC01-0016 | 右側上蓋 | 1 | ECN.350 |
| 22 | 705-001600-00 | Brand Plate (GODEX) | 銘板 | 1 | |
| 23 | 700-031800-01 | Top Right Panel | 右側面板上 | 1 | ECN.335 |
| 24 | 700-031900-02 | Bottom Right Panel | 右側面板下 | 1 | ECN.335, ECN.361 |
| 25 | 700-031700-02 | Left Panel | 左側面板 | 1 | ECN.335, ECN.361 |
| 26 | 700-041000-00 | LCD Cover | LCD 面板 | 1 | ECN.361 |
| 27 | 160-000103-21 | LCD PCB ASS'Y | LCD 板組合/EZ-2100 | 1 | |
| 28 | 601-260006-00 | LCD Cable-Main PCB | 連接線 LCD-主板 | 1 | |
| 29 | 160-000106-00 | RIBBON OUT PCB | RIBBON OUT PCB | 1 | |
| 30 | 700-035500-00 | Adj. Cushion §4*9*1.5 | 泡棉 Ø4*9*1.5 | 4 | |
| 31 | 820-530080-25 | Screw M3*8 | 自攻 M3*8 | 10 | |
| 32 | 801-440100-14 | Screw M4*10(SW+W) | 螺絲 M4*10(SW+W) | 9 | |
| 33 | 801-230452-11 | Flat Head Screw M3*4.5 | 平頭 M3*4.5 | 43 | |
| 34 | 840-000002-00 | Boss 3*10 | 銅柱 3*10 | 1 | |
| 35 | 801-630060-11 | Hex. Screw M3*6 | 外六角 M3*6 | 6 | |
| 36 | 851-821615-00 | Metal Washer §8.2*1.5t | 平墊圈 Ø8.2*1.5t(金屬) | 1 | |
| 37 | 141-000024-00 | Ribbon ASS'Y | 碳帶模組 | 1 | |
| 38 | 131-EZ2100-01 | Mechanism (200dpi) | 機心組合 | 1 | |
| 39 | 462-030012-00 | Stepping Motor | 步進馬達 | 1 | |
| 40 | 701-001900-00 | Idle Poly | 惰輪 | 1 | |
| 41 | 711-029200-00 | Poly Core | 惰輪軸心 | 1 | |
| 42 | 710-028300-00 | Poly Bracket Spec 1.2 | 惰輪支架 | 1 | |
| 43 | 712-027300-00 | Idle Poly Spring §1.0*10*23L | 惰輪拉伸彈簧 | 1 | |
| 44 | 703-027700-00 | Round Belt 100MXL | 皮帶 100MXL | 1 | |
| 45 | 858-400805-00 | Nylon | 塑膠華司 Ø4*Ø8*0.5t | 1 | |
| 46 | 703-028800-00 | Wire Clip (WL-1) | 電線固定座(WL-1) | 1 | |
| 47 | 710-028500-00 | Motor Bracket | 馬達支架 | 1 | |
| 49 | 801-430060-15 | Screw M3*6+SW | 螺絲 M3*6+SW | 5 | ECN.335 |
| 50 | 855-300706-00 | E Ring §3 | E 型扣 Ø3 | 2 | |
| 51 | 855-400906-00 | E Ring §4 | E 型扣 Ø4 | 3 | |
| 52 | 712-027200-00 | Ribbon Rewind Spring | 碳帶回拉拉伸彈簧 | 1 | |
| 53 | 700-036400-01 | Side Gap Cover | 左側板遮蓋 | 1 | ECN.335 |
| 54 | 700-036700-00 | Adj. Cushion 20*20*5t | 泡棉 20*20*5t | 1 | |

| | MODEL: EZ-2100 | Data: 6-17-2003 | REV: C | DWG No.904-000192-00 | |
|---|---|---|---|---|---|
| **Item** | **Godex No.** | **Part Name** | **Chinese Part Name** | **Q'ty** | Remark |
| | | **EZ-2100 Finished Unit** | | | |
| 55 | 700-036600-00 | Mylar 13*9.5*0.25t | 麥拉片 13*9.5*0.25t | 1 | |
| 56 | 703-027500-00 | Plastic Screw SR2.6-3.2 | 塑膠鉚釘 SR2.6-3.2 | 2 | |
| 57 | 703-028300-00 | Plug M13 | 孔塞 M13 | 1 | |
| 58 | 730-012300-01 | Ribbon & Label Installation | RIBBON&LABEL 裝置圖示 | 1 | ECN.374 |
| 59 | 731-011700-00 | Ribbon Position Label / 45*5mm | 內外捲碳帶指示標籤 | 1 | |
| 60 | 801-940060-19 | Machine P/Lock Washer | 螺絲 M4*6+齒形華司 | 1 | |
| 61 | 705-001900-00 | Name Plate | LCD 飾蓋銘板 | 1 | ECN.361 |

3.1.2 EZ-2200 FINISHED UNIT

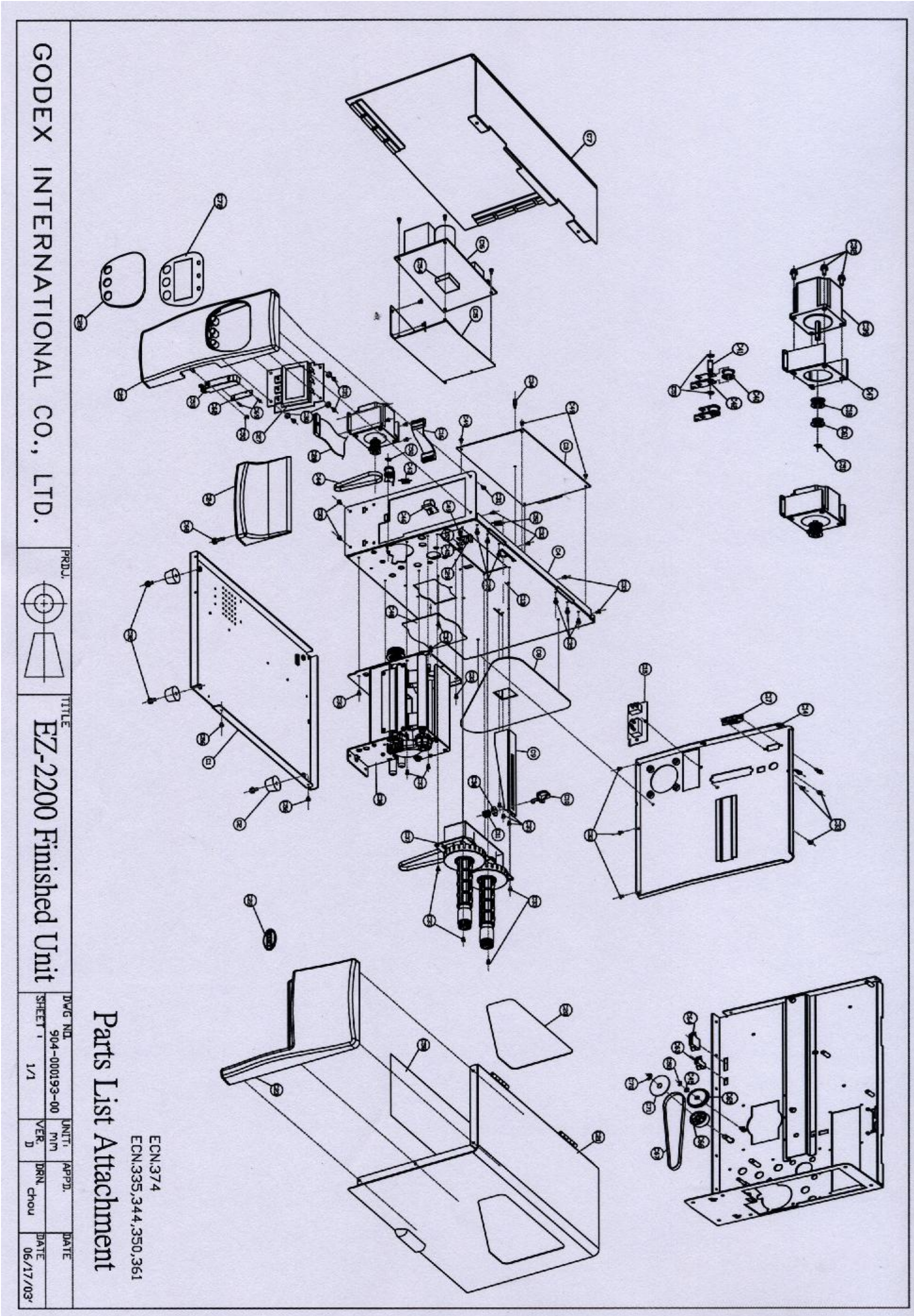

# PART LIST TABLE

**MODEL: EZ-2200** **Data:6-17-2003** **REV:D** DWG No.904-000193-00

| Item | Godex No. | Part Name | Chinese Part Name | Q'ty | Remark |
|---|---|---|---|---|---|
| | | **EZ-2200 Finished Unit** | | | |
| 1 | 710-029300-00 | Base Plate | 底板 | 1 | |
| 2 | 703-028400-00 | Rubber Foot | 腳墊 | 4 | |
| 3 | 160-000102-01 | MAIN BOARD PCB ASS'Y | 主機板組合 | 1 | |
| 4 | 710-029400-01 | Print Head Pressure Shaft | 中間隔板/ez-2200 | 1 | ECN.361 |
| 5 | 710-028200-00 | Power Bracket | 電源支架 | 1 | |
| 6 | 422-010006-00 | Switching Power(UPS110-1241-1) | 交流式穩壓整流器 | 1 | |
| 7 | 710-030200-01 | Left Cover | 左側上蓋 | 1 | ECN.361 |
| 8 | 710-028800-00 | Rapper Roll Plate | 紙捲檔板 | 1 | |
| 9 | 710-028700-00 | Label Roll Bar | 紙捲架 | 1 | |
| 10 | 700-032000-00 | Label Roll Guide | 紙捲調整桿 | 1 | |
| 11 | 712-028200-00 | Label Roll Guide Spring §1.0*7.0*15L*5N | 紙捲調整桿固定彈簧§ | 1 | |
| 13 | 700-032200-00 | Ribbon Position Lever | 碳帶內外捲調整鈕 | 1 | |
| 14 | 710-029500-00 | Back Cover | 後飾板 | 1 | |
| 15 | 142-000016-02 | Poser Switch ASS'Y | 開關固定板組合 | 1 | ECN.335 |
| 16 | 601-060009-05 | Power Cable-Main PCB | 連接線 power-主板 | 1 | |
| 17 | 601-000021-00 | RS232 | RS232 | 1 | |
| 18 | 701-001500-01 | 22T Gear (Double Hub) | 22T 皮帶輪(雙邊凸緣) | 1 | |
| 20 | 705-001700-00 | Acrylic Plate | 透明壓克力 | 1 | |
| 21 | 710-030300-01 | Right Cover No.KC01-0016 | 右側上蓋 | 1 | ECN.350 |
| 22 | 705-001600-00 | Brand Plate(GODEX) | 銘板 | 1 | |
| 23 | 700-031800-01 | Top Right Panel | 右側面板上 | 1 | ECN.335 |
| 24 | 700-031900-02 | Bottom Right Panel | 右側面板下 | 1 | ECN.335,ECN.361 |
| 25 | 700-031700-02 | Left Panel | 左側面板 | 1 | ECN.335,ECN.361 |
| 26 | 700-041000-00 | LCD Cover | LCD 面板 | 1 | ECN.361 |
| 27 | 160-000103-01 | LCD PCB ASS'Y (EZ-2200/2300) | LCD 板組合/EZ-2200/EZ-2300 | 1 | |
| 28 | 601-260006-00 | LCD Cable-Main PCB | 連接線 LCD-主板 | 1 | |
| 29 | 160-000106-00 | RIBBON OUT PCB | RIBBON OUT PCB | 1 | |
| 30 | 700-035500-00 | Adj. Cushion §4*9*1.5t/mm | 泡棉 Ø4*9*1.5t/mm | 4 | |
| 31 | 820-530080-25 | Tapping Screw M3*8 | 自攻 M3*8 | 10 | |
| 32 | 801-440100-14 | Screw M4*10(SW+W) | 螺絲 M4*10(SW+W) | 8 | |
| 33 | 801-230452-11 | Flat Head Screw M3*4.5 | 平頭 M3*4.5 | 45 | |
| 34 | 840-000002-00 | Boss 3*10 | 銅柱 3*10 | 1 | |
| 35 | 801-630060-11 | Hex. Screw M3*6 | 外六角 M3*6 | 6 | |
| 36 | 851-821615-00 | Metal Washer §8.2*1.5t | 平墊圈 Ø8.2*1.5t(金屬) | 1 | |
| 37 | 141-000024-00 | Ribbon ASS'Y | 碳帶模組 | 1 | |
| 38 | 131-EZ2200-01 | Mechanism(200dpi) EZ-2100/EZ-2200 | 機心組合 | 1 | |
| 39 | 462-030012-00 | Stepping Motor | 步進馬達 | 1 | |
| 40 | 701-001900-00 | Idle Poly §12*11.5t | 惰輪 | 1 | |
| 41 | 711-029200-00 | Poly Core | 惰輪軸心 | 1 | |
| 42 | 710-028300-00 | Poly Bracket | 惰輪支架 | 1 | |
| 43 | 712-027300-00 | Idle Poly Spring §1.0*10*23L | 惰輪拉伸彈簧 | 1 | |
| 44 | 703-027700-00 | Belt 100MXL | 皮帶 100MXL | 1 | |
| 45 | 858-400805-00 | Nylon §4.0*§8.0*0.5t/mm | 塑膠華司 Ø4*Ø8*0.5t | 2 | |
| 46 | 703-028800-00 | Wire Clip(WL-1) | 電線固定座(WL-1) | 1 | |
| 47 | 710-028500-00 | Motor Bracket | 馬達支架 | 1 | |
| 48 | 710-034100-00 | Rewind Wall Plate Spec 1.2t | 背紙回收遮蓋 | 1 | |
| 49 | 801-430060-15 | Machine Screw M3*6 | 螺絲 M3*6+SW | 5 | ECN.335 |
| 50 | 855-300706-00 | E Ring §3 | E 型扣 Ø3 | 3 | |
| 51 | 855-400906-00 | E Ring §4 | E 型扣 Ø4 | 3 | |

**MODEL: EZ-2200 Data:6-17-2003 REV:D** DWG No.904-000193-00

| Item | Godex No. | Part Name | Chinese Part Name | Q'ty | Remark |
|---|---|---|---|---|---|
| | | **EZ-2200 Finished Unit** | | | |
| 52 | 712-027200-00 | Ribbon Rewind Spring | 碳帶回拉拉伸彈簧 | 1 | |
| 53 | 700-036000-01 | Stripper Box | STRIP SENSOR PCB 盒 | 1 | ECN.335 |
| 54 | 700-036700-00 | Adj. Cushion 20*20*5t | 泡棉 20*20*5t | 1 | |
| 55 | 700-036600-00 | Mylar 13*9.5*0.25t | 麥拉片 13*9.5*0.25t | 1 | |
| 56 | 703-027500-00 | Plastic Screw SR2.6-3.2 | 塑膠鉚釘 SR2.6-3.2 | 2 | |
| 58 | 730-012300-01 | Ribbon & Lable Instruction Label | RIBBON&LABEL 裝置圖示 | 1 | ECN.374 |
| 59 | 731-011700-00 | Ribbon Position Label | 內外捲碳帶指示標籤 | 1 | |
| 60 | 801-940060-19 | Screw M4*6+Tooth Washer | 螺絲 M4*6+齒形華司 | 1 | |
| 61 | 701-002900-00 | 22T Gear (Single Hub) | 22T 皮帶輪(單邊凸緣) | 1 | |
| 62 | 160-000114-00 | Stripper Sensor PCB | STRIP SENSOR PCB | 1 | |
| 63 | 601-020023-00 | 2 Pin Cable-Rewind | 連接線 2PIN / Rewind | 1 | |
| 64 | 601-050019-00 | 5 Pin Cable-Cutter | 連接線 5PIN / Cutter | 1 | |
| 65 | 701-001200-00 | 64T (ID §4) Gear | 64T(IDØ4)正齒輪 | 1 | |
| 66 | 701-002500-00 | 40/36 Tooth Gear | 40/36T 複合齒輪 | 1 | |
| 67 | 703-027800-02 | Belt 140MXL | 皮帶 140MXL | 1 | |
| 68 | 703-029000-00 | Hand Screw M4*6*§10 | 手轉螺絲 M4*6*Ø10 | 1 | |
| 69 | 820-417050-15 | Screw M1.7*5 | 自攻 M1.7*5 | 2 | |
| 70 | 855-501106-00 | E Ring 5 | E 型扣 Ø5 | 1 | |
| 71 | 858-602905-00 | Washer §6*§29*0.5t | 塑膠華司 Ø6*Ø29*0.5t | 1 | |
| 72 | 705-002000-00 | LCD Cover Plate | LCD 飾蓋銘板 | 1 | ECN.361 |

3.1.3 EZ-2300 FINISHED UNIT

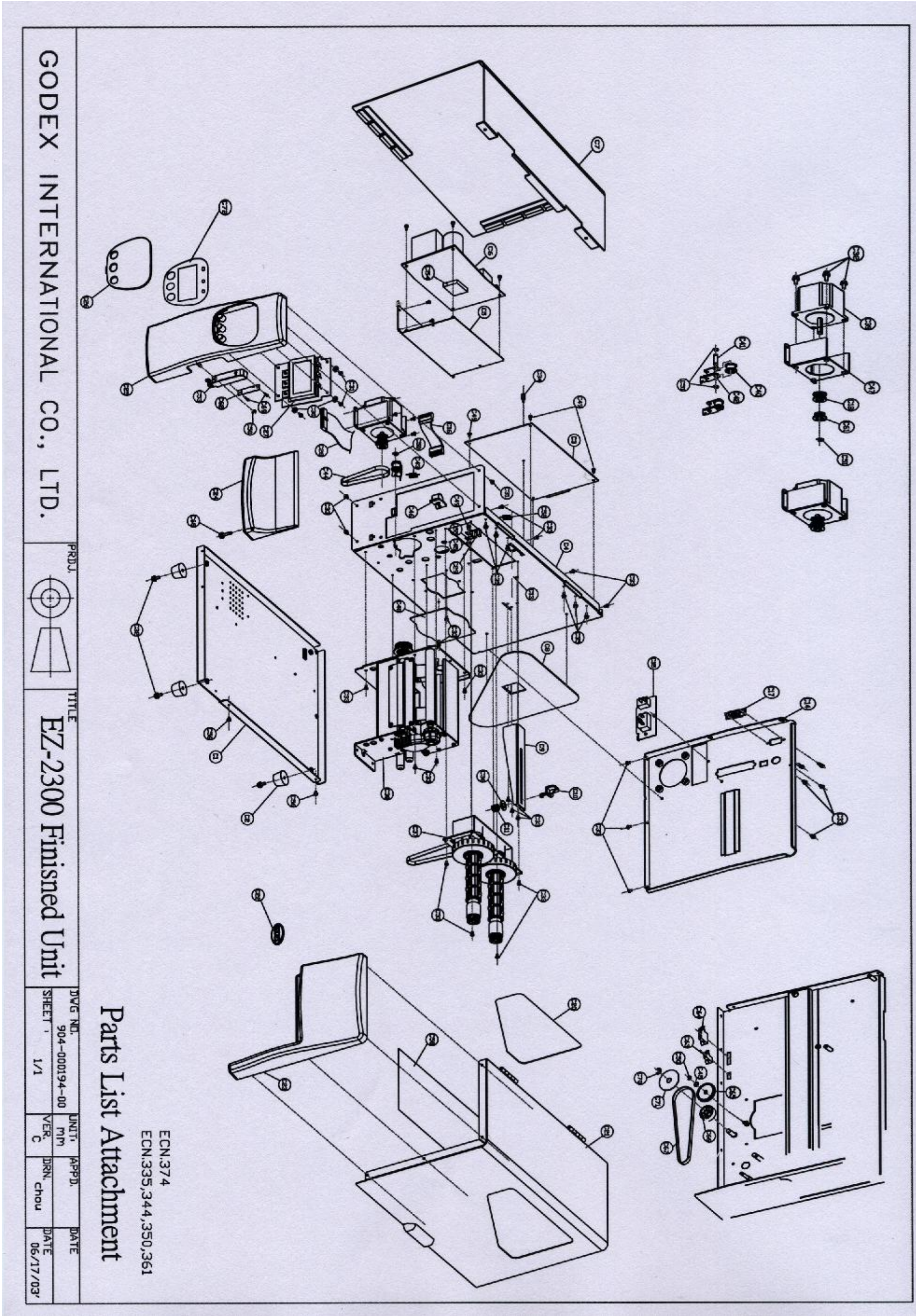

# PART LIST TABLE

| MODEL: EZ-2300 | Data:6-17-2003 | REV:C | No.904-000194-00 | | |
|---|---|---|---|---|---|
| Item | Godex No. | Part Name | Chinese Part Name | Q'ty | Remark |
| | | EZ-2300 Finished Unit | | | |
| 1 | 710-029300-00 | Base Plate | 底板 | 1 | |
| 2 | 703-028400-00 | Rubber Foot | 腳墊 | 4 | |
| 3 | 160-000102-10 | MAIN BOARD PCB | 主機板組合/EZ-2300 | 1 | |
| 4 | 710-029400-01 | Middle Wall Plate | 中間隔板/ez-2200 | 1 | ECN.361 |
| 6 | 422-010006-00 | Switching Power | 交流式穩壓整流器 | 1 | |
| 5 | 710-028200-00 | Power Bracket | 電源支架 | 1 | |
| 7 | 710-030200-01 | Left Cover | 左側上蓋 | 1 | ECN.361 |
| 8 | 710-028800-00 | Paper Roll Plate | 紙捲檔板 | 1 | |
| 9 | 710-028700-00 | Label Roll Bar | 紙捲架 | 1 | |
| 10 | 700-032000-00 | Label Roll Guide | 紙捲調整桿 | 1 | |
| 11 | 712-028200-00 | Power Bracket | 紙捲調整桿固定彈簧 | 1 | |
| 13 | 700-032200-00 | Ribbon Position Lever | 碳帶內外捲調整鈕 | 1 | |
| 14 | 710-029500-00 | Back Cover | 後飾板 | 1 | |
| 15 | 142-000016-02 | Power Switch ASS'Y | 開關固定板組合 | 1 | ECN.335 |
| 16 | 601-060009-05 | Power Cable-Main PCB | 連接線 power-主板 | 1 | |
| 17 | 601-000021-00 | RS232 | RS232 | 1 | |
| 18 | 701-001500-01 | 22T Gear (Double Hub) | 22T 皮帶輪(雙邊凸緣) | 1 | |
| 20 | 705-001700-00 | PANEL | 透明壓克力 | 1 | |
| 21 | 710-030300-01 | Right Cover | 右側上蓋 | 1 | ECN.350 |
| 22 | 705-001600-00 | LOGO | 銘板 | 1 | |
| 23 | 700-031800-01 | Top Right Panel | 右側面板上 | 1 | ECN.335 |
| 24 | 700-031900-02 | Bottom Right Panel | 右側面板下 | 1 | ECN.335, ECN.361 |
| 25 | 700-031700-02 | Left Panel | 左側面板 | 1 | ECN.335, ECN.361 |
| 26 | 700-041000-00 | LCD Cover | LCD 面板 | 1 | ECN.361 |
| 27 | 160-000103-01 | LCD PCB ASS'Y | LCD 板組合/EZ-2200/EZ-2300 | 1 | |
| 28 | 601-260006-00 | LCD Cable-Main PCB | 連接線 LCD-主板 | 1 | |
| 29 | 160-000106-00 | RIBBON OUT PCB | RIBBON OUT PCB | 1 | |
| 30 | 700-035500-00 | Bottom Mach. Bracket | 泡棉 Ø4*9*1.5 | 4 | |
| 31 | 820-530080-25 | Screw M3*8 | 自攻 M3*8 | # | |
| 32 | 801-440100-14 | M4*10 | 螺絲 M4*10(SW+W) | 8 | |
| 33 | 801-230452-11 | Flat Head Screw M3*4.5 | 螺絲 M3*4.5 平頭 | # | |
| 34 | 840-000002-00 | Boss 3*10 | 銅柱 3*10 | 1 | |
| 35 | 801-630060-11 | Hex. Screw M3*6 | 外六角 M3*6 | 6 | |
| 36 | 851-821615-00 | Metal Washer 8.2*16*1.5t | 平墊圈 Ø8.2*16*1.5t(金屬) | 1 | |
| 37 | 141-000024-00 | Ribbon Ass'"y | 碳帶模組 | 1 | |
| 38 | 131-EZ2300-01 | Mechanism Ass"y | 機心組合 | 1 | |
| 39 | 462-030012-00 | Stepping Motor | 步進馬達 | 1 | |
| 40 | 701-001900-00 | Idle Poly | 惰輪 | 1 | |
| 41 | 711-029200-00 | Poly Core | 惰輪軸心 | 1 | |
| 42 | 710-028300-00 | Poly Bracket | 惰輪支架 | 1 | |
| 43 | 712-027300-00 | Idle Poly Spring | 惰輪拉伸彈簧 | 1 | |
| 44 | 703-027700-01 | Belt 100MXL | 皮帶 112MXL/EZ-2300 | 1 | |
| 45 | 858-400805-00 | Washer Ø4*Ø8*0.5t | 塑膠華司 Ø4*Ø8*0.5t | 2 | |
| 46 | 703-028800-00 | Wire Clip (WL-1) | 電線固定座(WL-1) | 1 | |
| 47 | 710-028500-00 | Motor Bracket | 馬達支架 | 1 | |
| 48 | 710-034100-00 | Rewind Wall Plate | 背紙回收遮蓋 | 1 | |
| 49 | 801-430060-15 | Screw M3*6+SW | 螺絲 M3*6+SW | 5 | |
| 50 | 855-300706-00 | E Ring Ø3 | E 型扣 Ø3 | 3 | |
| 51 | 855-400906-00 | E Ring Ø34 | E 型扣 Ø4 | 3 | |
| 52 | 712-027200-00 | Ribbon Rewind Spring | 碳帶回拉拉伸彈簧 | 1 | |

**MODEL: EZ-2300 Data:6-17-2003 REV:C No.904-000194-00**

| Item | Godex No. | Part Name | Chinese Part Name | Q'ty | Remark |
|---|---|---|---|---|---|
| | | **EZ-2300 Finished Unit** | | | |
| 53 | 700-036000-01 | Stripper Box | STRIP SENSOR PCB 盒 | 1 | ECN.335 |
| 54 | 700-036700-00 | Adj. Cushion 20*20*5t | 泡棉 20*20*5t | 1 | |
| 55 | 700-036600-00 | Mylar Piece 13*9.5*0.25t | 麥拉片 13*9.5*0.25t | 1 | |
| 56 | 703-027500-00 | Snap Rivet RS2.6-3.2 | 塑膠鉚釘 SR2.6-3.2 | 2 | |
| 58 | 730-012300-01 | Ribbon & Label Instruction Label | RIBBON&LABEL 裝置圖示 | 1 | ECN.374 |
| 59 | 731-011700-00 | Ribbon Position Label | 內外捲碳帶指示標籤 | 1 | |
| 60 | 801-940060-19 | Screw M4*6+Tooth Washer | 螺絲 M4*6+齒形華司 | 1 | |
| 61 | 701-002900-00 | 22t (Single Hub) | 22T 皮帶輪(單邊凸緣) | 1 | |
| 62 | 160-000114-00 | Stripper Sensor PCB | STRIP SENSOR PCB | 1 | |
| 63 | 601-020023-00 | 2 Pin Cable-Rewind | 連接線 2PIN / Rewind | 1 | |
| 64 | 601-050019-00 | 5 Pin Cable-Cutter | 連接線 5PIN / Cutter | 1 | |
| 65 | 701-001200-00 | 64T (ID Ø4) Gear | 64T(IDØ4)正齒輪 | 1 | |
| 66 | 701-002500-00 | 40/36 Tooth Gear | 40/36T 複合齒輪 | 1 | |
| 67 | 703-027800-02 | Belt 140MXL | 皮帶 140MXL | 1 | |
| 68 | 703-029000-00 | Hand Screw M4*6*10 | 手轉螺絲 M4*6*Ø10 | 1 | |
| 69 | 820-417050-15 | Screw M1.7*5 | 自攻 M1.7*5 | 2 | |
| 70 | 855-501106-00 | E Ring 5 | E 型扣 Ø5 | 1 | |
| 71 | 858-602905-00 | Washer Ø6*Ø29*0.5t | 塑膠華司 Ø6*Ø29*0.5t | 1 | |
| 72 | 705-002000-00 | LCD Cover Plate | LCD 飾蓋銘板 | 1 | ECN.361 |

3.1.4 EZ-2100/2200 MECHANISM ASS'Y

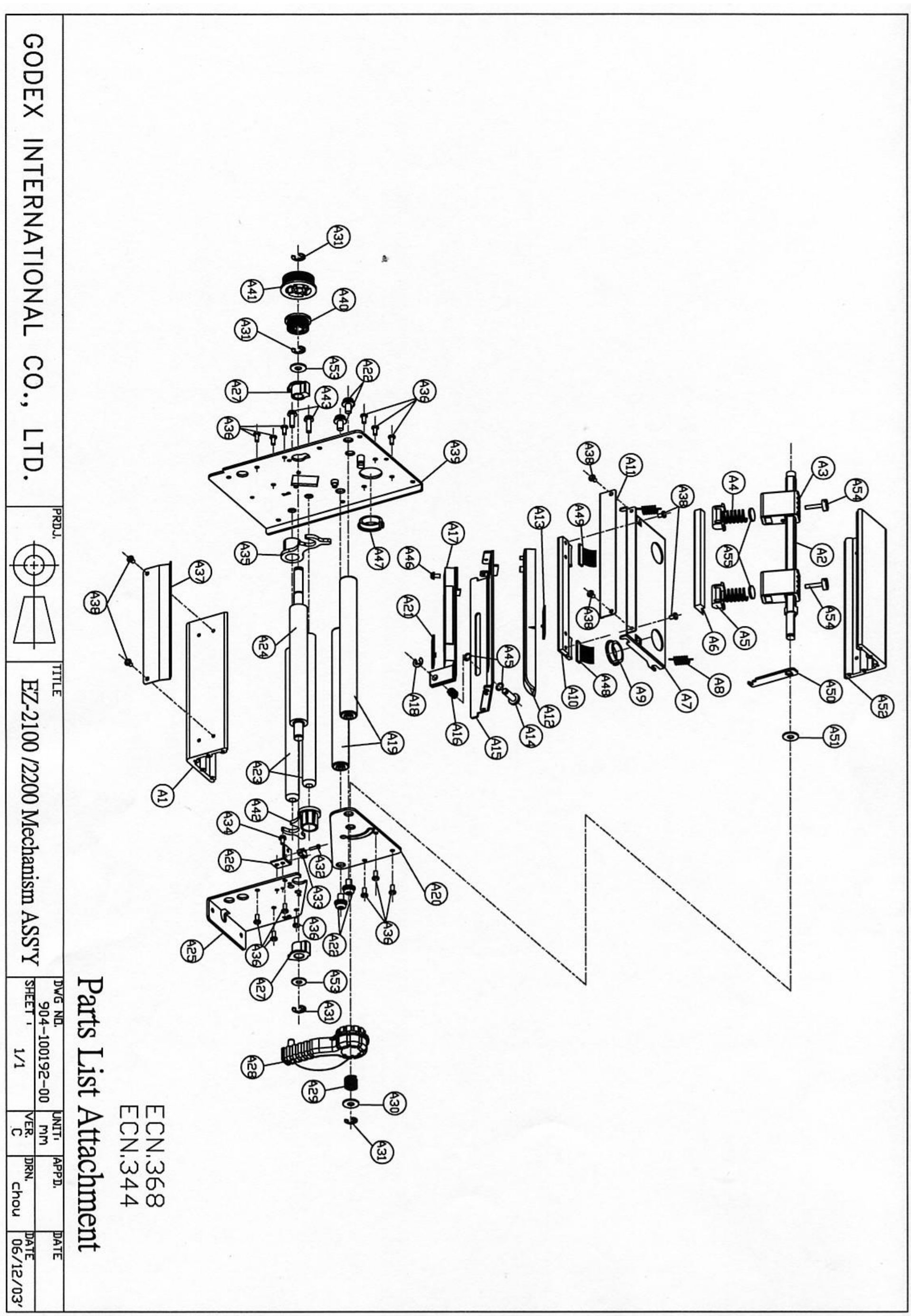

# PART LIST TABLE

**MODEL: EZ-2100/2200 data: 6-12-2003 REV: C** No.904-100192-00

| Item | Godex No. | Part Name | Chinese Part Name | Q'ty | Remark |
|---|---|---|---|---|---|
| | | **EZ-2100/EZ-2200** | **Mechanism ASS'Y (共用)** | | |
| 1 | 710-033500-00 | Bottom Mach Bracket | 中間組立架(下) | 1 | |
| 2 | 711-029400-01 | Print Head Pressure Shaft | 印表頭壓力旋轉軸 | 1 | ECN.368 |
| 3 | 700-030800-01 | Print Head Spring Box | 印表頭彈簧固定盒 | 2 | ECN.368 |
| 4 | 712-029600-00 | Print Head Spring | 印表頭彈簧 | 2 | ECN.368 |
| 5 | 700-030700-00 | Print Head Pressure Head | 印表頭壓力頭 | 2 | |
| 6 | 700-035100-00 | Print Head Pressure Plate | 印表頭壓板 | 1 | |
| 7 | 710-028900-00 | TPH Bracket | 印表頭支架 | 1 | |
| 8 | 712-027000-00 | Print Head Lift Spring | 印表頭抬起拉伸彈簧 | 2 | |
| 9 | 703-026400-00 | Snap Bushing / NB-19A | 開口式護線環/NB-19A | 2 | |
| 10 | 460-000016-01 | TPH KF2004-GD39B (ROHM) | 印表頭 | 1 | |
| 11 | 710-030400-00 | Ribbon Expansion Adj. Plate | 碳帶張力調整片 | 1 | |
| 12 | 700-031100-00 | Moveable Sensor Box (top cover) | 移動 SENSOR 盒上蓋 | 1 | |
| 13 | 160-000105-00 | SEE THROU PCB | PCB | 1 | |
| 14 | 711-029600-00 | Sensor Box Lever | SENSOR 盒移動桿 | 1 | |
| 15 | 710-029600-00 | Moveable Sensor Bracket | 移動 SENSOR 固定架 | 1 | |
| 16 | 712-027100-00 | Moveable Sensor Spring | 移動 SENSOR 固定彈簧 | 1 | |
| 17 | 700-031200-00 | Moveable Sensor Box (lower cover) | 移動 SENSOR 下蓋 | 1 | |
| 18 | 855-400906-00 | E Ring 4 | E 型扣 Ø 4 | 1 | |
| 19 | 711-029500-00 | Ribbon Shaft 5 | 碳帶軸桿 Ø15 | 2 | |
| 20 | 710-029000-00 | Upper Right Bracket | 右側上板 | 1 | |
| 21 | 160-000104-00 | BLACK MARK PCB | PCB | 1 | |
| 22 | 801-460120-14 | Screw M6*12(SW+W) | 螺絲 M6*12(SW+W) | 4 | |
| 23 | 711-030600-00 | Label Feed Bar | 導紙桿 | 2 | |
| 24 | 702-000800-00 | Platen | PLATEN 橡膠滾輪 | 1 | |
| 25 | 710-029100-01 | Bottom Right Bracket | 右側下板 | 1 | ECN.344 |
| 26 | 710-028000-00 | Print Head Switch Bracket | 印表頭開關支架 | 1 | |
| 27 | 710-033200-01 | Platen Bearing | PLATEN 軸襯 | 2 | ECN.344 |
| 28 | 700-030900-00 | Print Head Lever | 印表頭壓力旋轉臂 | 1 | |
| 29 | 712-027500-00 | Print Head Lever Spring | TPH 旋臂壓縮彈簧 | 1 | |
| 30 | 851-821615-00 | Metal Washer § 8.2* § 16*1.5 | 墊片 Ø 8.2*Ø16*1.5t(金屬) | 1 | |
| 31 | 855-601208-00 | E Ring | E 型扣 Ø 6 | 4 | |
| 32 | 801-420080-11 | Screw M2*8 | 螺絲 M2*8 | 1 | |
| 33 | 162-000008-00 | DOOR OPEN | 微動開關加工 | 1 | |
| 34 | 801-430040-15 | SCREW M3*4 | 螺絲 M3*4+SW | 1 | |
| 35 | 700-030500-00 | Label Adj. Guide (Left) | 標籤調整桿(左) | 1 | |
| 36 | 801-230602-11 | SCREW | 螺絲 M3*6 平頭 | 14 | ECN.344 |
| 37 | 710-029800-00 | Tear Off Bar | 撕紙架 | 1 | |
| 38 | 801-230452-11 | SCREW | 螺絲 M3*4.5 平頭 | 6 | ECN.344 |
| 39 | 710-029200-01 | Left Bracket | 左側板 | 1 | ECN.344 |
| 40 | 701-001700-00 | 30 Tooth Gear | 30 齒皮帶輪 | 1 | |
| 41 | 701-001600-00 | 44 Tooth Gear | 44 齒皮帶輪 | 1 | |
| 42 | 700-035900-00 | Label Adj. Guide (Right) | 標籤調整桿(右) | 1 | |
| 43 | 801-450100-14 | Screw M5*10(SW+W) | 螺絲 M5*10(+SW+W) | 2 | |
| 45 | 858-520805-00 | Washer § 5.2* § 8*0.5t | 塑膠華司 Ø5.2*Ø8*0.5t | 2 | |
| 46 | 820-430080-15 | Screw M3*8 | 自攻 M3*8 | 1 | |
| 47 | 703-028700-00 | Rubber Cable Clip | 橡膠護線環 | 1 | |
| 48 | 601-150006-08 | HOUSING P1.25 MEL-JAE 15P*2L L380mm | 印表頭排線 | 1 | |
| 49 | 601-150007-08 | HOUSING P1.25 JAE-JAE 15P*2L L300mm | 印表頭排線 | 1 | |
| 50 | 710-034200-00 | TPH Lever Hook | 印表頭旋轉臂卡勾 | 1 | |
| 51 | 860-811605-00 | Washer § 8.1* § 16*0.5 | 石墨華司 Ø 8.1*Ø16*0.5 | 1 | |

**MODEL: EZ-2100/2200 data: 6-12-2003 REV: C** No.904-100192-00

| Item | Godex No. | Part Name | Chinese Part Name | Q'ty | Remark |
|---|---|---|---|---|---|
| | | **EZ-2100/EZ-2200** | **Mechanism ASS'Y (共用)** | | |
| 52 | 710-034600-00 | Middle Wall (Top) | 中間組立架(上) | 1 | |
| 53 | 860-821205-00 | Graphite Washer | 石墨華司 Ø 8.2*Ø12*0.5 | 2 | |
| 54 | 711-038600-00 | Print Head Adj. Screw | 壓力調整螺絲 | 2 | ECN.368 |
| 55 | 710-039600-00 | Washer Ø11.5*1.6t | 墊片 Ø11.5*1.6t | 2 | ECN.368 |

3.1.5 EZ-2300 MECHANISM ASS'Y

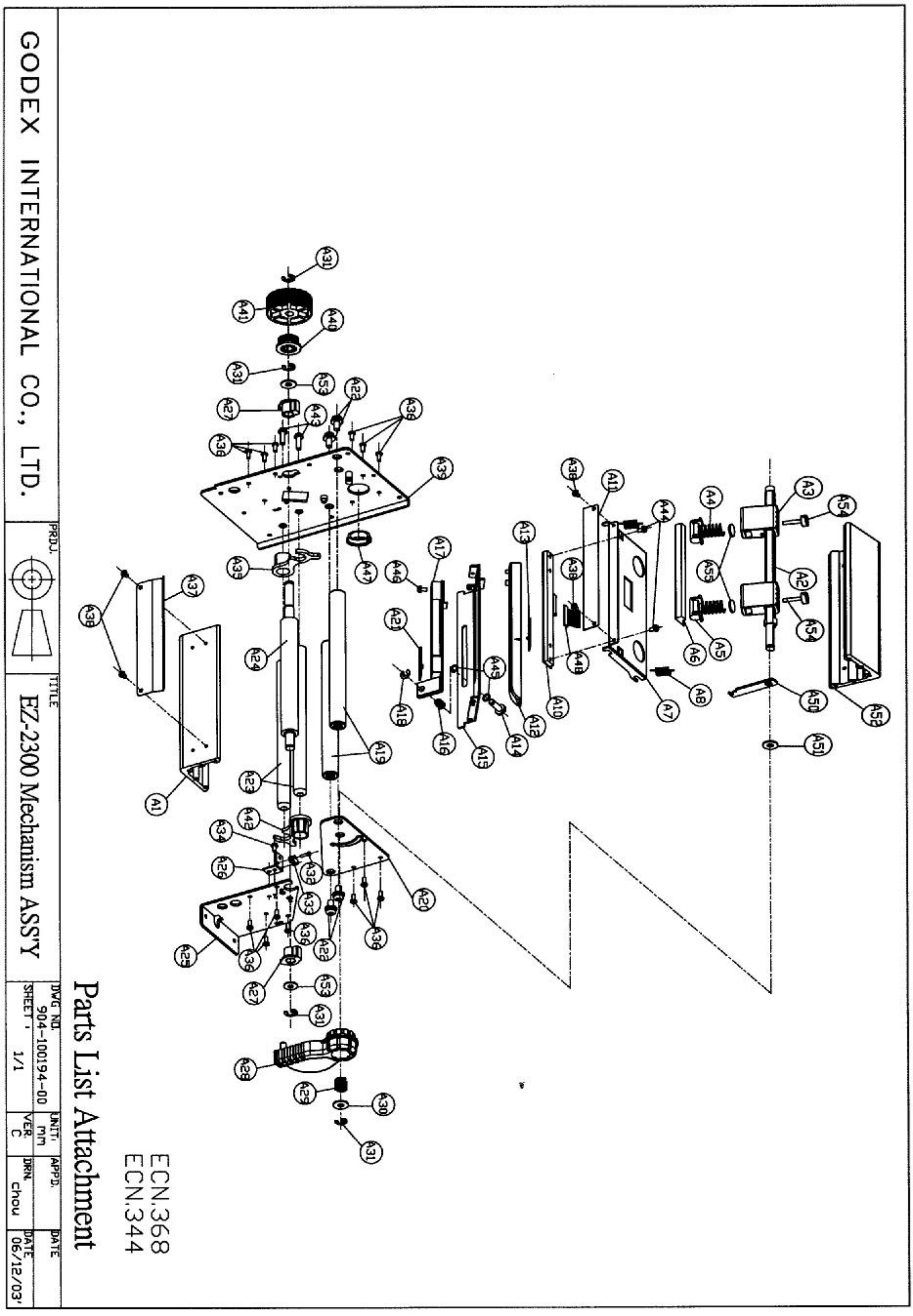

# PART LIST TABLE

**MODEL: EZ-2300 Data:6-12-2003 REV:C** DWG No.904-100194-00

| Item | Godex No. | Part Name | Chinese Part Name | Q'ty | Remark |
|---|---|---|---|---|---|
| | | **EZ-2300 Mechanism Ass'y** | | | |
| 1 | 710-033500-00 | Bottom Mach. Bracket | 中間組立架(下) | 1 | |
| 2 | 711-029400-01 | Print Head Pressure Shaft | 印表頭壓力旋轉軸 | 1 | ECN.368 |
| 3 | 700-030800-01 | Print Head Spring Box | 印表頭彈簧固定盒 | 2 | ECN.368 |
| 4 | 712-029600-00 | Print Head Spring | 印表頭彈簧 | 2 | ECN.368 |
| 5 | 700-030700-00 | Print Head Pressure Head | 印表頭壓力頭 | 2 | |
| 6 | 700-035100-00 | Print Head Pressure Plate | 印表頭壓板 | 1 | |
| 7 | 710-034700-00 | Print Head Bracket | 印表頭支架/EZ-2300 | 1 | |
| 8 | 712-027000-00 | Print Head Lift Spring | 印表頭抬起拉伸彈簧 | 2 | |
| 10 | 460-000017-00 | Print Head KPG-106-12TA01-GO(KYOCERA) | 印表頭/EZ-2300 | 1 | |
| 11 | 710-030400-00 | Ribbon Expansion Adj. Plate | 碳帶張力調整片 | 1 | |
| 12 | 700-031100-00 | Moveable Sensor Box(top cover) | 移動 SENSOR 盒上蓋 | 1 | |
| 13 | 160-000105-00 | SEE THROU PCB | PCB | 1 | |
| 14 | 711-029600-00 | Sensor Box Lever | SENSOR 盒移動桿 | 1 | |
| 15 | 710-029600-00 | Moveable Sensor Bracket | 移動 SENSOR 固定架 | 1 | |
| 16 | 712-027100-00 | Moveable Sensor Spring | 移動 SENSOR 固定彈簧 | 1 | |
| 17 | 700-031200-00 | Moveable Sensor Box (lower cover) | 移動 SENSOR 下蓋 | 1 | |
| 18 | 855-400906-00 | E Ring 4 | E 型扣 Ø 4 | 1 | |
| 19 | 711-029500-00 | Ribbon Shaft 5 | 碳帶軸桿 Ø15 | 2 | |
| 20 | 710-029000-00 | Upper Right Bracket | 右側上板 | 1 | |
| 21 | 160-000104-00 | BLACK MARK PCB | PCB | 1 | |
| 22 | 801-460120-14 | Screw M6*12(SW+W) | 螺絲 M6*12(SW+W) | 4 | |
| 23 | 711-030600-00 | Label Feed Bar | 導紙桿 | 2 | |
| 24 | 702-000800-00 | Platen Roller | PLATEN 橡膠滾輪 | 1 | |
| 25 | 710-029100-01 | Bottom Right Bracket | 右側下板 | 1 | ECN.344 |
| 26 | 710-028000-00 | Print Head Switch Bracket | 印表頭開關支架 | 1 | |
| 27 | 710-033200-01 | Platen Bearing | PLATEN 軸襯 | 2 | ECN.344 |
| 28 | 700-030900-00 | Print Head Lever | 印表頭壓力旋轉臂 | 1 | |
| 29 | 712-027500-00 | Print Head Lever Spring | TPH 旋臂壓縮彈簧 | 1 | |
| 30 | 851-821615-00 | Metal Washer Ø 8.2*Ø16*1.5t | 墊片 Ø 8.2*Ø16*1.5t(金屬) | 1 | |
| 31 | 855-601208-00 | E Ring 6 | E 型扣 Ø 6 | 4 | |
| 32 | 801-420080-11 | Screw M2*8 | 螺絲 M2*8 | 1 | |
| 33 | 162-000008-00 | DOOR OPEN | 微動開關加工 | 1 | |
| 34 | 801-430040-15 | Screw M3*4 | 螺絲 M3*4+SW | 1 | |
| 35 | 700-030500-00 | Label Adj. Guide (Left) | 標籤調整桿(左) | 1 | |
| 36 | 801-230602-11 | Flat Head Screw M3*6 | 螺絲 M3*6 平頭 | 14 | ECN.344 |
| 37 | 710-029800-00 | Tear Off Bar | 撕紙架 | 1 | |
| 38 | 801-230452-11 | SCREW | 螺絲 M3*4.5 平頭 | 6 | ECN.344 |
| 39 | 710-029200-01 | Left Bracket | 左側板 | 1 | ECN.344 |
| 40 | 701-001700-00 | 30 Tooth Gear | 30 齒皮帶輪 | 1 | |
| 41 | 701-002800-00 | 65 Tooth Gear | 65 齒皮帶輪/EZ-2300 | 1 | |
| 42 | 700-035900-00 | Label Adj. Guide (Right) | 標籤調整桿(右) | 1 | |
| 43 | 801-450100-14 | Screw M5/10 (SW+W) | 螺絲 M5*10(SW+W) | 2 | |
| 45 | 858-520805-00 | Washer Ø5.2*Ø8*0.5t | 塑膠華司 Ø5.2*Ø8*0.5t | 2 | |
| 46 | 820-430080-15 | Screw M3*8 | 自攻 M3*8 | 1 | |
| 47 | 703-028700-00 | Rubber Cable Clip | 橡膠護線環 | 1 | |
| 48 | 601-260004-03 | HOUSING 200PH-26P*2/ L500mm | 印表頭排線/EZ-2300 | 1 | |
| 50 | 710-034200-00 | TPH Lever Hook | 印表頭旋轉臂卡勾 | 1 | |
| 51 | 860-811605-00 | Washer Ø 8.1*16*0.5 | 石墨華司 Ø 8.1*16*0.5 | 1 | |
| 52 | 710-034600-00 | Middle Wall (Top) | 中間組立架(上) | 1 | |
| 53 | 860-821205-00 | Graphite Washer Ø 8.2*12*0.5 | 石墨華司 Ø 8.2*12*0.5 | 2 | |
| 54 | 711-038600-00 | TPH Pressure Screw | 壓力調整螺絲 | 2 | ECN.368 |

| MODEL: EZ-2300 | Data:6-12-2003 | REV:C | DWG No.904-100194-00 | | |
|---|---|---|---|---|---|
| **Item** | **Godex No.** | **Part Name** | **Chinese Part Name** | **Q'ty** | **Remark** |
| | | **EZ-2300** | **Mechanism Ass'y** | | |
| 55 | 710-039600-00 | Washer Ø 11.5*1.6t | 墊片 Ø 11.5*1.6t | 2 | ECN.368 |

3.1.6 EZ-2100/2200/2300 RIBBON MODULE

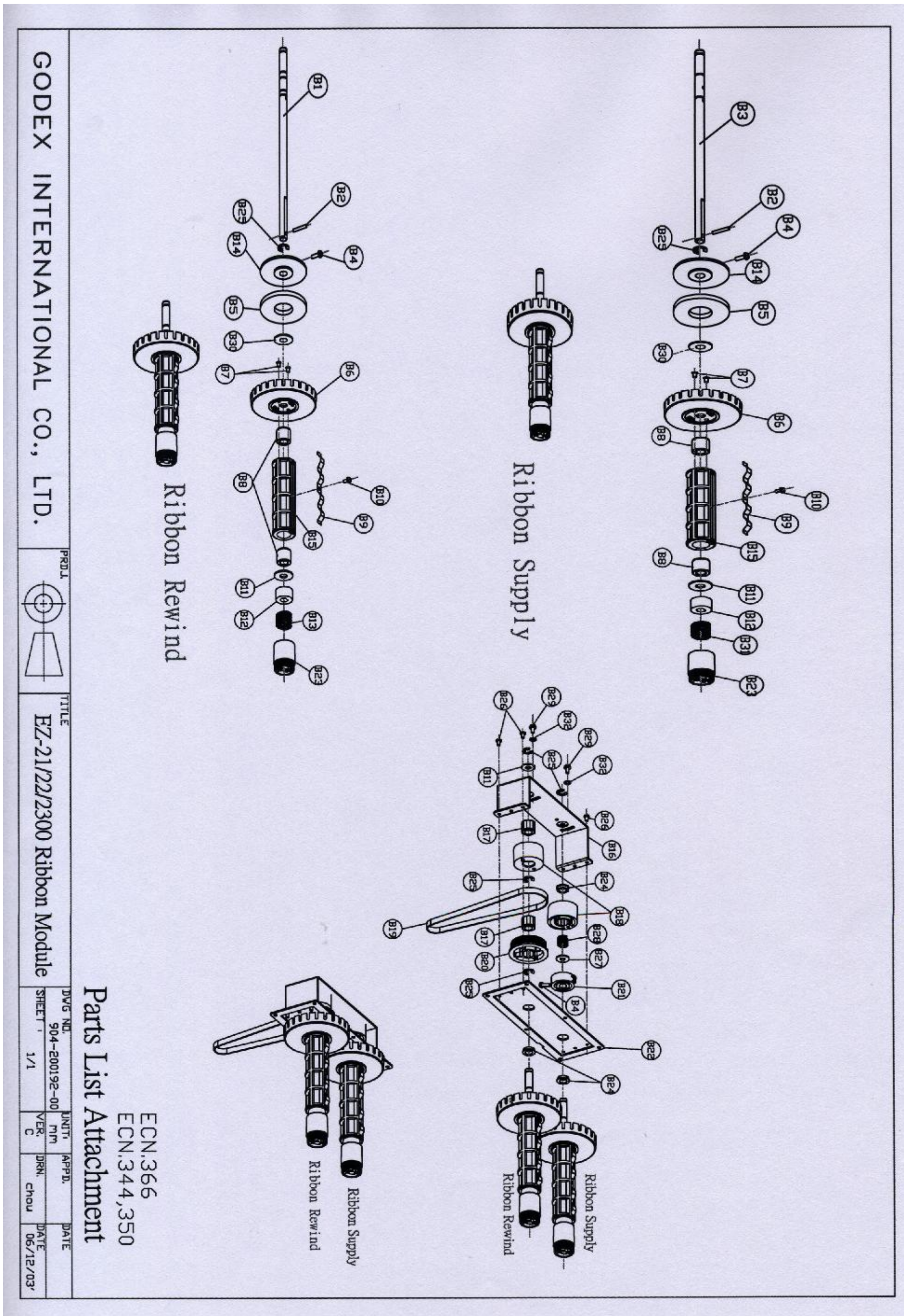

# PART LIST TABLE

| MODEL: EZ-2100 | Data:6-12-2003 | REV:C | DWG No.904-200192-00 | | |
|---|---|---|---|---|---|
| **Item** | **Godex No.** | **Part Name** | **Chinese Part Name** | **Q'ty** | Remark |
| | | **EZ-2100/2200/2300** | **Ribbon Module** | | |
| 1 | 711-028900-00 | Ribbon Rewind Core | 碳帶回收軸心 | 1 | |
| 2 | 713-020100-00 | Spring Twig Ø2.5*16L | 彈簧銷 Ø2.5*16L | 2 | |
| 3 | 711-028800-00 | Ribbon Supply Core | 碳帶供應軸心 | 1 | |
| 4 | 801-430120-11 | SCREW M3*12/NI | 螺絲 M3*12 | 3 | |
| 5 | 700-031400-00 | Wool Fiber Ø50*Ø20*4T | 羊毛氈 Ø50*Ø20*4T | 2 | |
| 6 | 700-030000-00 | Ø70 Friction Plate | Ø70 摩擦盤 | 2 | |
| 7 | 820-726060-25 | TAPPING SCREW M2.6*6/F/BK | 螺絲 M2.6*6 | 4 | |
| 8 | 710-033100-00 | Bearing 15*8*15L | 軸襯 15*8*15L | 4 | |
| 9 | 710-027900-00 | Ribbon Core Blade | 碳帶紙蕊固定彈片 | 2 | |
| 10 | 820-430040-13 | TAPPING SCREW/P/NI/M3*4 | 螺絲 M3*4 | 2 | |
| 11 | 860-811605-00 | Washer Ø 8.1*16*0.5 | 石墨華司 Ø 8.1*16*0.5 | 3 | |
| 12 | 700-029900-00 | Ø18 Friction Plate | Ø18 摩擦盤 | 2 | |
| 13 | 712-027400-00 | Ribbon Supply Spring | 碳帶回收壓縮彈簧 | 1 | ECN.366 |
| 14 | 700-030100-00 | Ø50 Friction Plate | Ø50 摩擦盤 | 2 | |
| 15 | 700-034600-00 | Ribbon Shaft | 碳帶滾軸 | 2 | |
| 16 | 710-028400-00 | Ribbon Core Support Bracket | 碳帶軸心支撐座 | 1 | |
| 17 | 713-011300-01 | One Way Clutch | 單向軸承 | 2 | |
| 18 | 700-035300-01 | One Way Clutch Holder | 單向軸承座 | 2 | ECN.344 |
| 19 | 703-027800-01 | Belt 160MXL025 | 160MXL025 皮帶 | 1 | |
| 20 | 701-001800-00 | 60 Tooth Gear | 60 齒皮帶輪 | 1 | |
| 21 | 700-030400-00 | Ribbon Rewind Plate | 碳帶回收盤 | 1 | |
| 22 | 710-030700-00 | Ribbon Ass”y Wall Plate | 碳帶模組支稱座 | 1 | |
| 23 | 700-030200-00 | 4 Notch Knob | 四段調整扭 | 2 | |
| 24 | 713-011400-00 | LF1280 ZZ-NMB | 滾珠軸承 Ø12*8 | 3 | |
| 25 | 855-601208-00 | E Ring Ø6 | E 型扣環 Ø6 | 6 | |
| 26 | 801-230452-11 | Flat Head Screw M3*4.5 | 平頭螺絲 M3*4.5 | 4 | ECN.335 |
| 27 | 851-821615-00 | Metal Washer Ø8.2*Ø16*1.5t | 平墊圈 Ø8.2*Ø16*1.5t(金屬) | 1 | |
| 28 | 712-028300-00 | Ribbon Rewind Secure | 碳帶回收盤固定彈簧 | 1 | |
| 29 | 801-630060-11 | Hexagonal Screw M3*6 | 外六角 M3*6 | 2 | ECN.368 |
| 30 | 858-822010-00 | Nylon Washer Ø8.2*Ø20*1.0t | 尼龍華司 Ø8.2*Ø20*1.0t | 2 | ECN.350 |
| 31 | 712-029500-00 | Ribbon Supply Spring | 碳帶供應壓縮彈簧 | 1 | ECN.366 |
| 32 | 852-300705-00 | Geared Washer Ø3*7*0.5t | 內齒華司 Ø3*7*0.5t | 2 | ECN.368 |

### 3.2 SPO SPART LIST

(A)

| NO | Description | Part No. | Qty. |
|---|---|---|---|
| 1 | Ribbon Rewinder Core | 711-028900-XX | 1 |
| 2 | Spring Post 2.5*16L | 713-020100-XX | 1 |
| 4 | Screw M3*12 | 801-430120-11 | 1 |
| 5 | Wool Fiber 50*20*4T | 700-031400-XX | 1 |
| 6 | Friction Disc 70 | 700-030000-XX | 1 |
| 7 | Screw M2.6*6 | 820-726060-25 | 2 |
| 8 | Bushing 15*8*15L | 710-033100-XX | 2 |
| 9 | Ribbon Shaft Blade | 710-027900-XX | 1 |
| 10 | Screw M3*4 | 820-430040-13 | 1 |
| 11 | Washer 8.1*16*0.5 | 860-811605-XX | 1 |
| 12 | Friction Plate 18 | 700-029900-XX | 1 |
| 13 | Ribbon Supply Spring | 712-027400-XX | 1 |
| 14 | Friction Felt 50 | 700-030100-XX | 1 |
| 15 | Ribbon Shaft | 700-034600-XX | 1 |
| 23 | 4 Notch Knob | 700-030200-XX | 1 |
| 25 | E Ring 6 | 855-601208-XX | 1 |
| | Washer | 858-822010-XX | 1 |

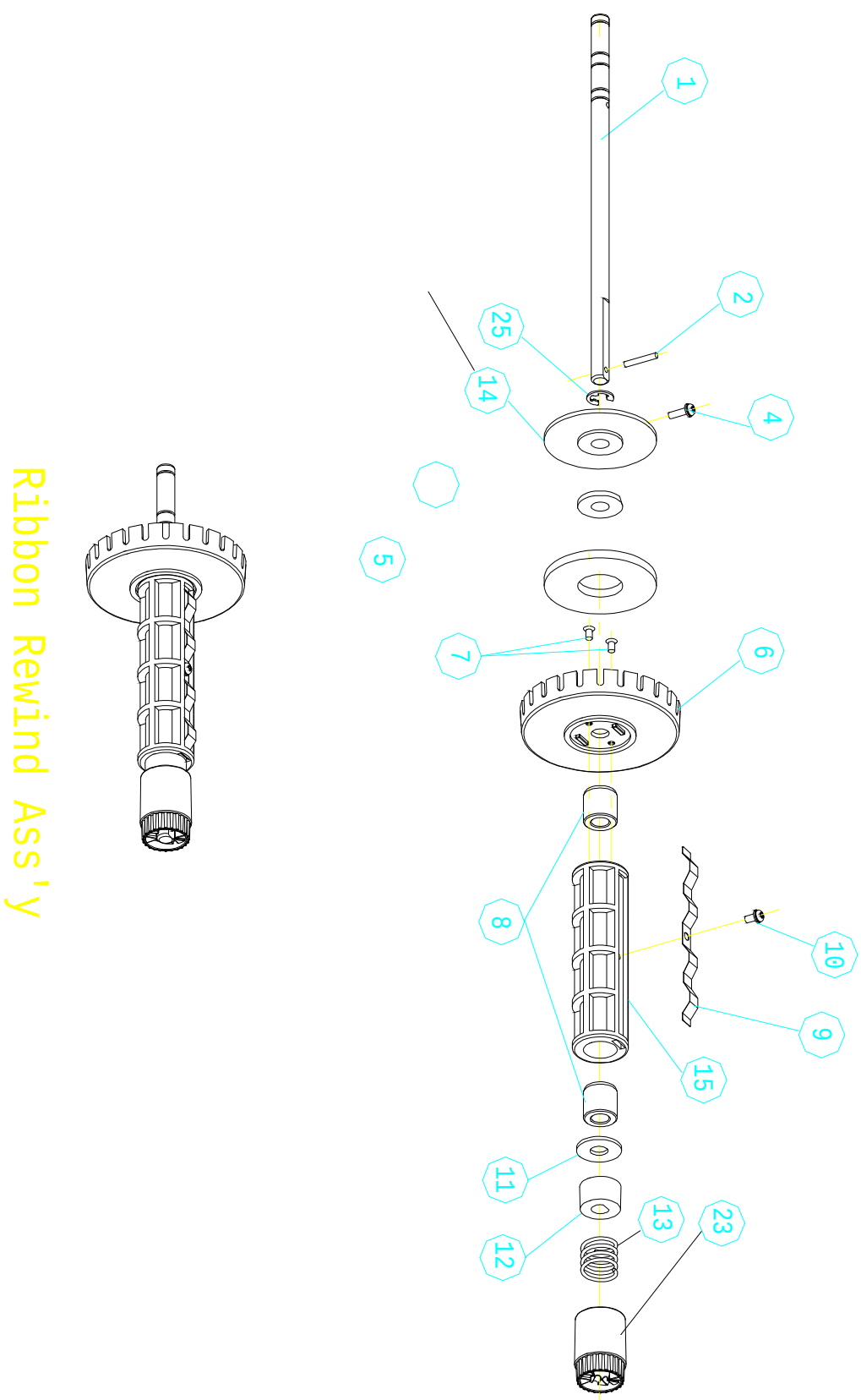


Ribbon Rewind Ass'y

EZ-2200PM1

(B)

| No | Description | Part No. | Qty. |
|---|---|---|---|
| 2 | Spring Post 2.5*16L | 713-020100-XX | 1 |
| 3 | Ribbon Supply Core | 711-028800-XX | 1 |
| 4 | Screw M3*12 | 801-430120-11 | 1 |
| 5 | Wool Fiber 50*20*4T | 700-031400-XX | 1 |
| 6 | Friction Disc 70 | 700-030000-XX | 1 |
| 7 | Screw M2.6*6 | 820-726060-25 | 2 |
| 8 | Bushing 15*8*15L | 710-033100-XX | 2 |
| 9 | Ribbon Shaft Blade | 710-027900-XX | 1 |
| 10 | Screw M3*4 | 820-430040-13 | 1 |
| 11 | Washer 8.1*16*0.5 | 860-811605-XX | 1 |
| 12 | Friction Plate 18 | 700-029900-XX | 1 |
| 13 | Ribbon Shaft Spring | 712-029500-XX | 1 |
| 14 | Friction Felt 50 | 700-030100-XX | 1 |
| 15 | Ribbon Shaft | 700-034600-XX | 1 |
| 234 | Notch knob | 700-030200-XX | 1 |
| 25 | E Ring 6 | 855-601208-XX | 1 |
| | Washer | 858-822010-XX | 1 |

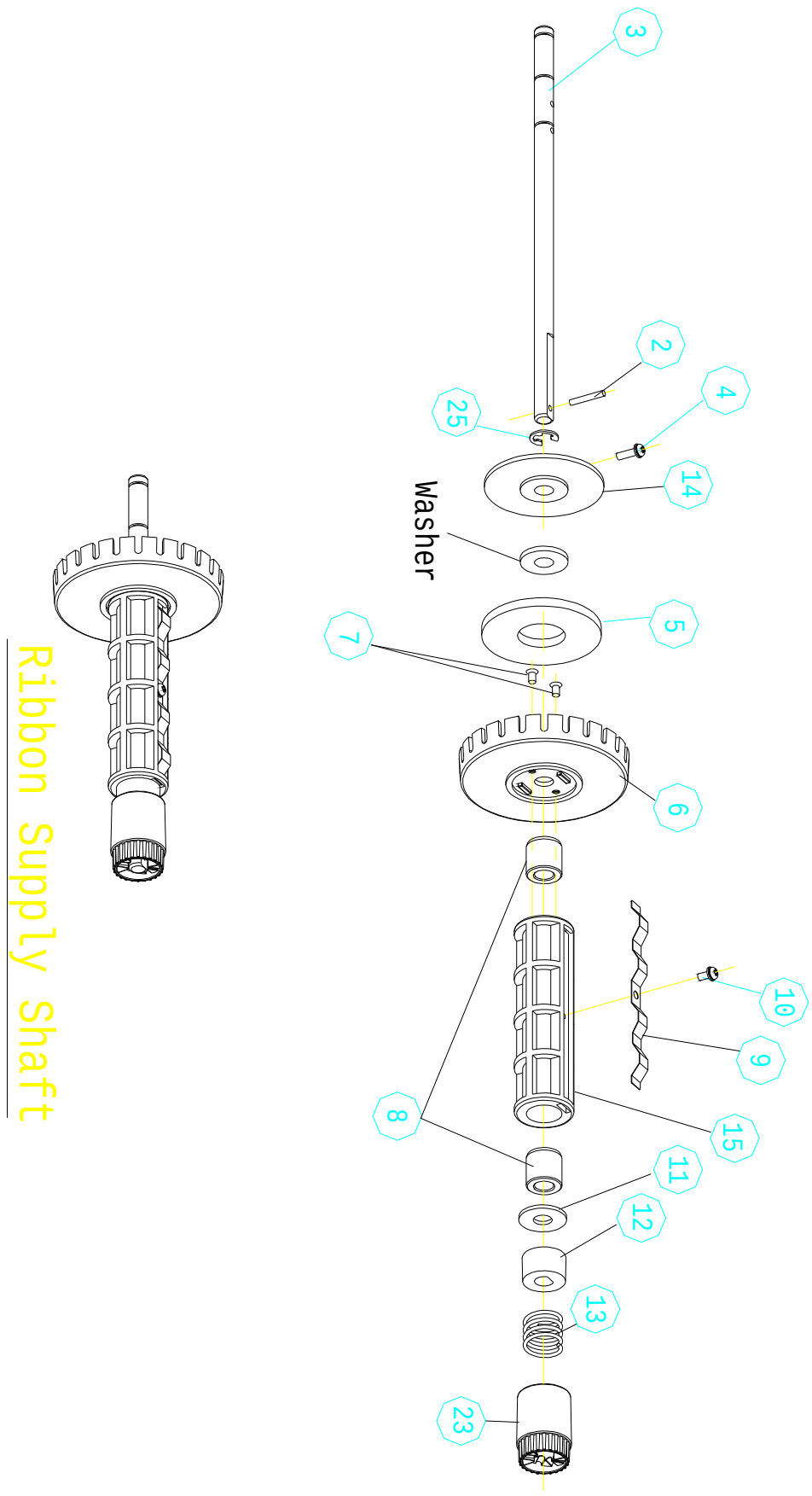


Ribbon Supply Shaft

EZ-2200PM2

(C)

| NO | Description | Part No. | Qty. |
|---|---|---|---|
| 4 | Screw M3*12 | 801-430120-11 | 1 |
| 16 | Ribbon Core Bracket | 710-028400-XX | 1 |
| 17 | One Way Bushing | 713-011300-XX | 2 |
| 18 | One Way Bushing Frame | 700-035300-XX | 1 |
| 19 | 160MXL025 Belt | 703-027800-01 | 1 |
| 20 | 60 Tooth Gear | 701-001800-XX | 1 |
| 21 | Ribbon Rewind Plate | 700-030400-XX | 1 |
| 22 | Ribbon Ass'y Wall Plate | 710-030700-XX | 1 |
| 24 | Ball Bushing 12*8 | 713-011400-XX | 2 |
| 25 | E Ring 6 | 855-601208-XX | 3 |
| 26 | Flat Head Screw M3*4.5 | 801-230452-11 | 4 |
| 27 | Washer | 851-821615-XX | 1 |
| 28 | Ribbon Rewind Pressure Spring | 712-028300-XX | 1 |
| 11 | Washer 8.1*16*0.5 | 860-811605-XX | 1 |
| 29 | Screw M3*6 | 801-630060-11 | 2 |

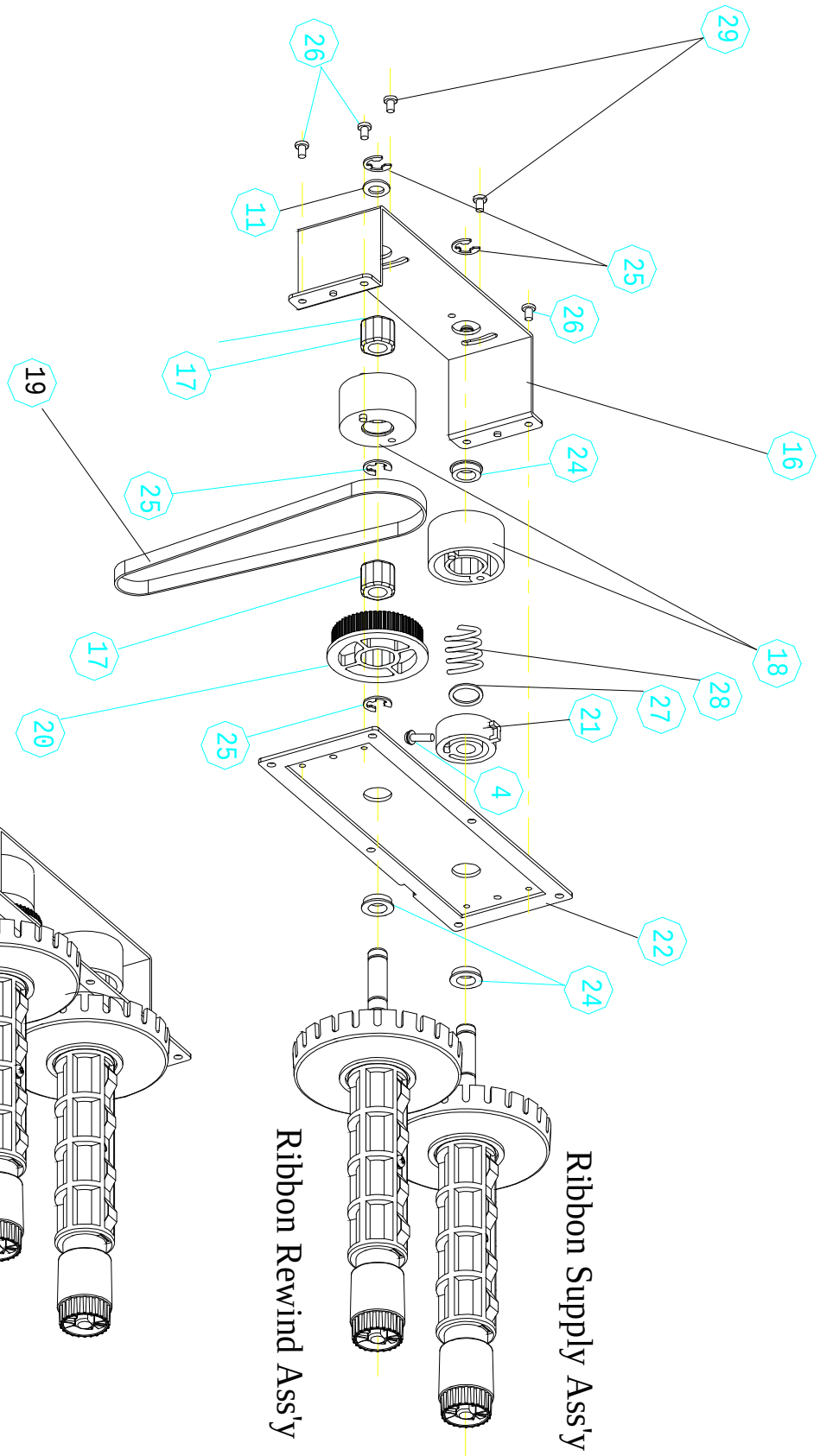


EZ-2200PM3

(D)

| NO | Description | Part No. | Qty. |
|---|---|---|---|
| 6 | Print Head Pressure Plate | 700-035100-XX | 1 |
| 7 | Print Head Bracket | 710-028900-XX | 1 |
| 9 | Cable Ring/NB-19A | 703-026400-XX | 2 |
| 10 | Print Head | 460-000016-XX | 1 |
| 11 | Ribbon Pressure Adj. Plate | 710-030400-XX | 1 |
| 38 | Flat Head Screw M3*4.5 | 801-230452-11 | 4 |
| 48 | PH Cable L380mm(Red/Black) | 601-150006-08 | 1 |
| 49 | PH Cable L300mm(Blue/White) | 601-150007-08 | 1 |
| 54 | Cable Clip L75mm | 703-012500-XX | 2 |

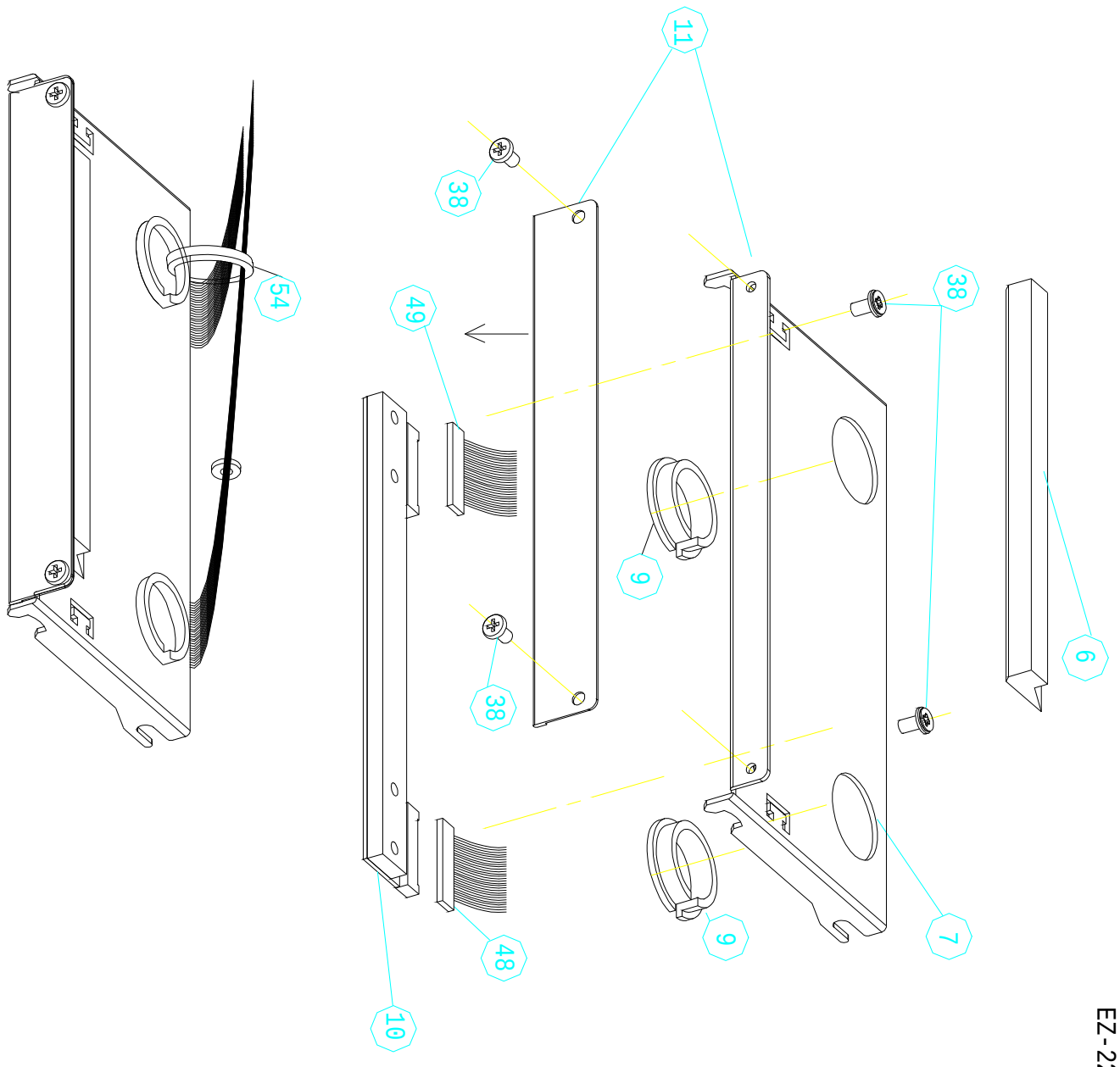


EZ-2200PM4

(E)

| NO | Description | Part No. | Qty. |
|---|---|---|---|
| 6 | Print Head Pressure Plate | 700-035100-XX | 1 |
| 7 | Print Head Bracket | 710-034700-XX | 1 |
| 10 | Print Head | 460-000017-XX | 1 |
| 11 | Ribbon Pressure Adj. Plate | 710-030400-XX | 1 |
| 38 | Flat Head Screw M3*4.5 | 801-230452-11 | 4 |
| 48 | Print Head Connector L380mm | 601-150006-08 | 1 |
| 54 | Cable Ring 75mm | 703-012500-XX | 1 |

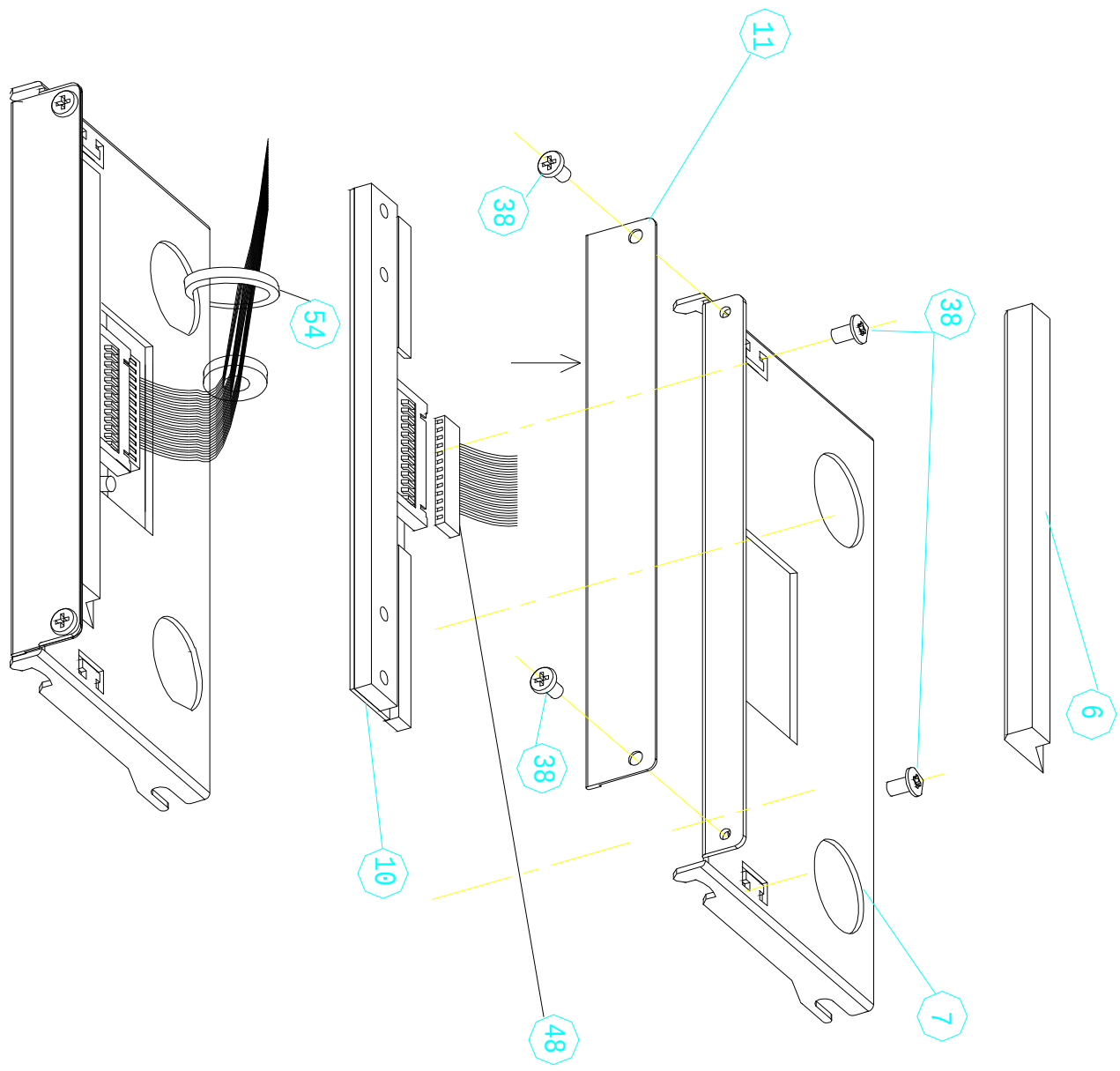


EZ-2300PM4

(F)

(G)

| NO | Description | Part No. | Qty. |
|---|---|---|---|
| 2 | Print Head Pressure Shaft | 711-029400-XX | 1 |
| 3 | Print Head Spring Box | 700-030800-XX | 2 |
| 4 | Print Head Spring | 712-029600-XX | 2 |
| 5 | Print Head Pressure Head | 700-030700-XX | 2 |
| | Print Head Lever Hook | 710-034200-XX | 1 |

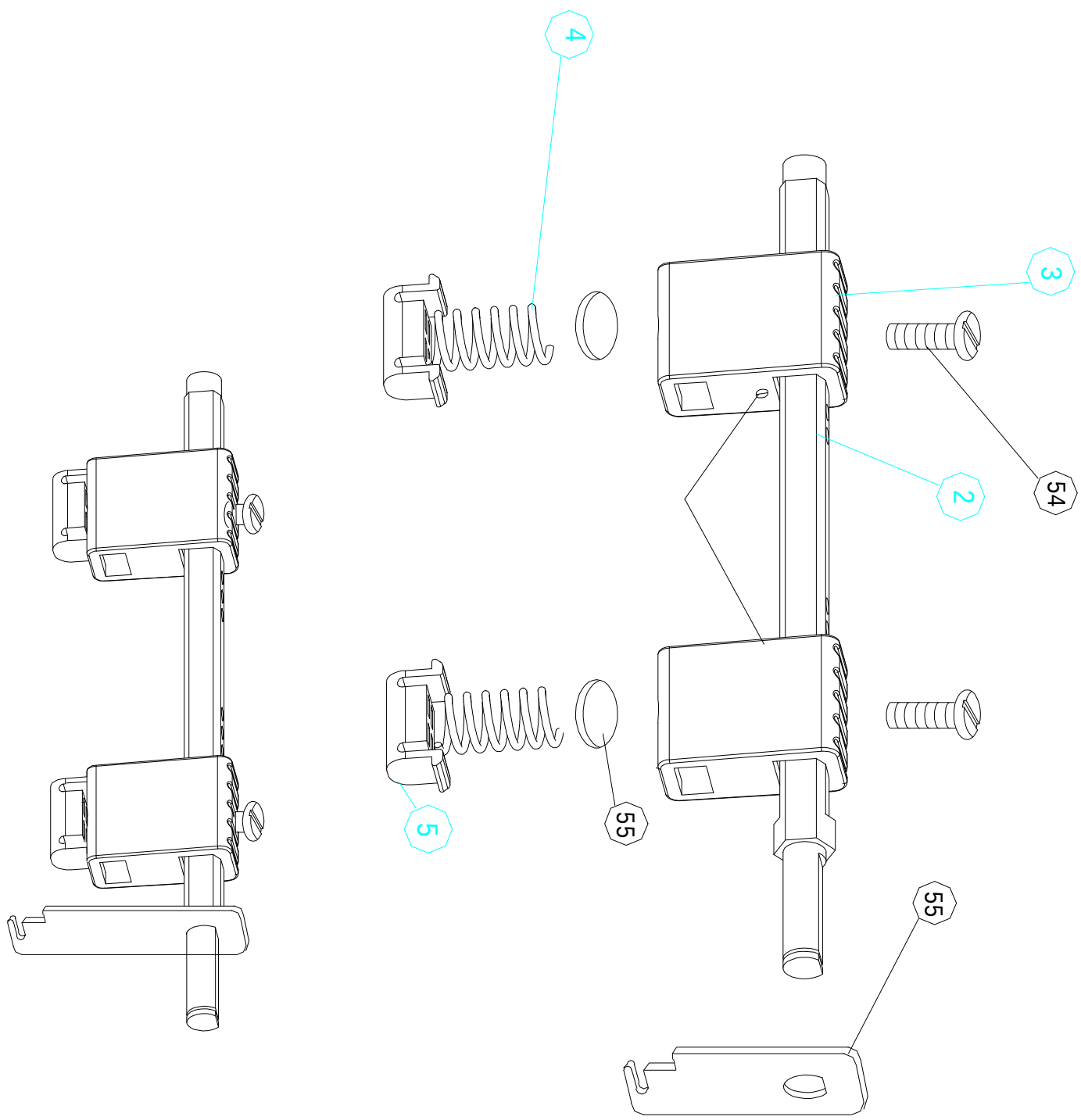


EZ-2200PM6

(H)

| NO | Description | Part No. | Qty. |
|---|---|---|---|
| 12 | Moveable Sensor Cover (Top) | 700-031100-XX | 1 |
| 13 | See Through PCB | 160-000105-XX | 1 |
| 14 | Sensor Box Lever | 711-029600-XX | 1 |
| 15 | Moveable Sensor Bracket | 710-029600-XX | 1 |
| 16 | Moveable Sensor Spring | 712-027100-XX | 1 |
| 17 | Moveable Sensor Cover (Bottom) | 700-031200-XX | 1 |
| 18 | E Ring 4 | 855-400906-XX | 1 |
| 21 | Black Mark Sensor PCB | 160-000104-XX | 1 |
| 45 | Washer 5.2 | 858-520805-XX | 2 |
| 46 | Screw M3*8 | 820-430080-15 | 1 |

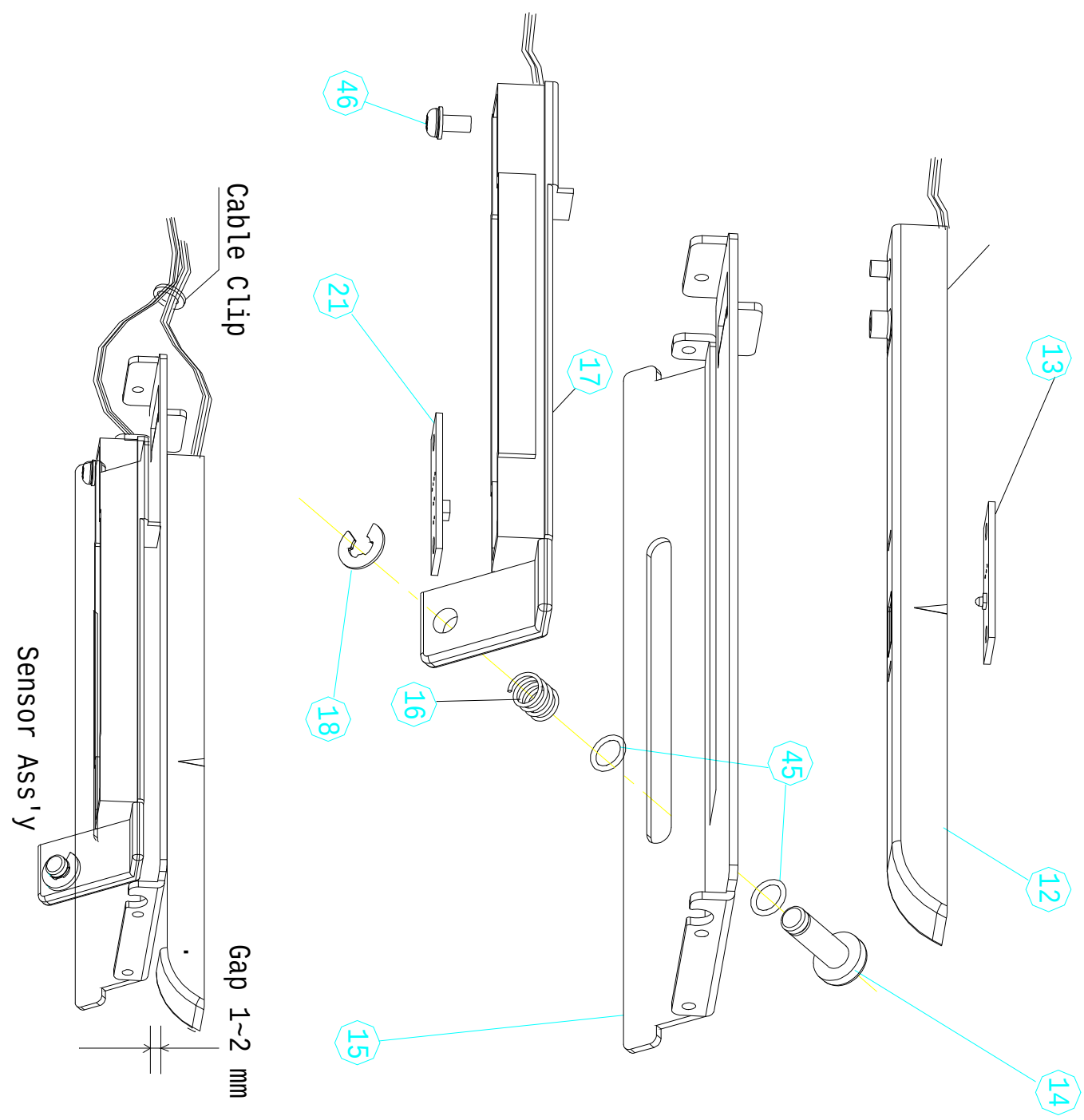


EZ-2200PM7

( I )

(J)

| NO | Description | Part No. | Qty. |
|---|---|---|---|
| 8 | Print Head Lift Spring | 712-027000-XX | 2 |
| 20 | Upper Right Bracket | 710-029000-XX | 1 |
| 22 | Screw M6*12 | 801-460120-14 | 2 |
| 24 | Platen Roller | 702-000800-XX | 1 |
| 27 | Bearing | 710-033200-XX | 2 |
| 28 | Print Head Lever | 700-030900-XX | 1 |
| 29 | TPH Lever Spring | 712-027500-XX | 1 |
| 30 | Metal Washer 8.2 | 851-821615-XX | 1 |
| 31 | E Ring 6 | 855-601208-XX | 3 |
| 36 | Screw M3*6 | 801-230602-11 | 3 |
| 37 | Tear Off Bar | 710-029800-XX | 1 |
| 38 | Flat Head Screw 3*4.5 | 710-029800-XX | 2 |
| 53 | Washer | 860-821205-XX | 1 |

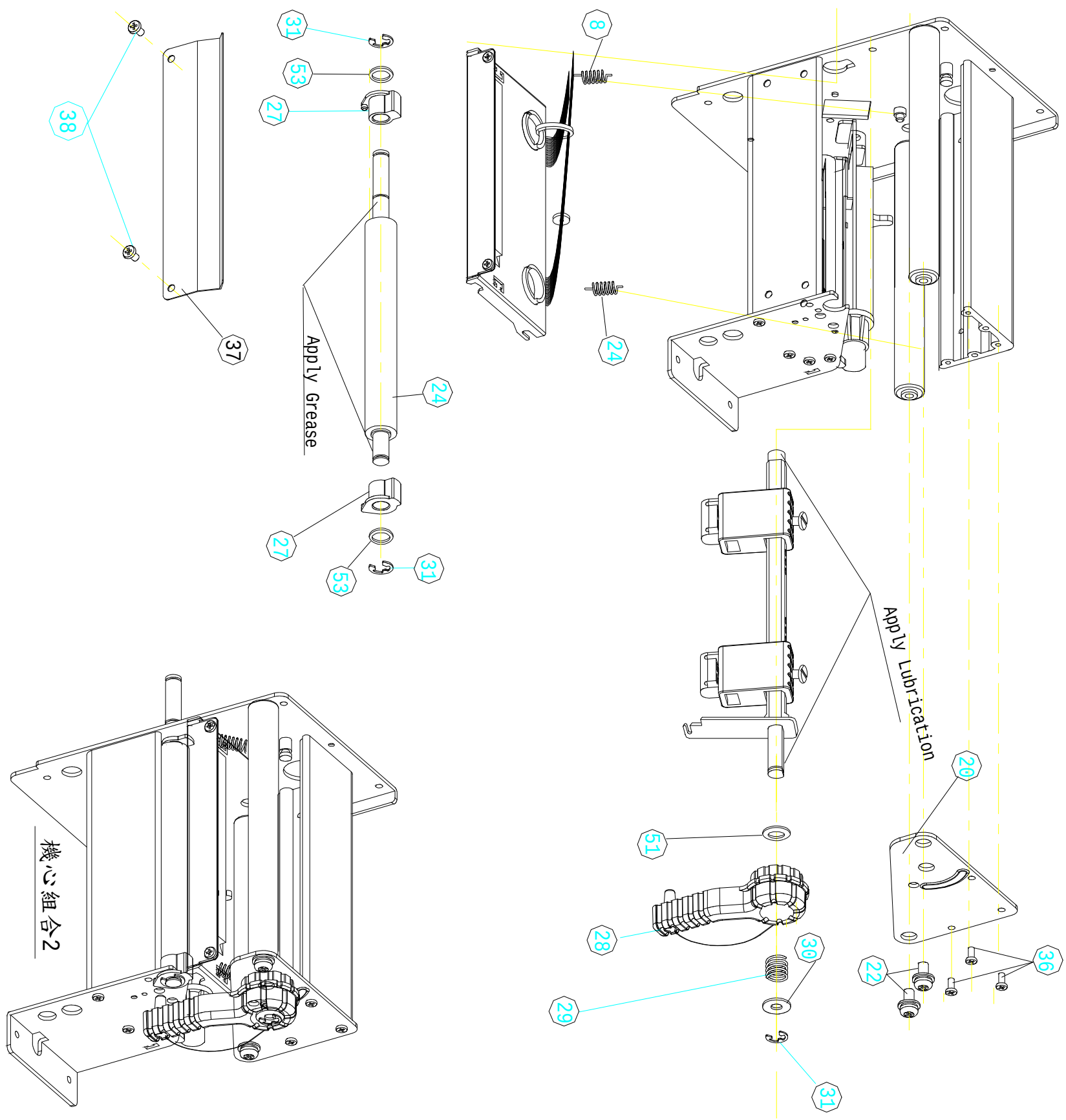


EZ-2200PM9

(k)

| NO | Description | Part No. | Qty. |
|---|---|---|---|
| 8 | PH Lift Spring | 712-027000-XX | 2 |
| 20 | Upper Right Bracket | 710-029000-XX | 1 |
| 22 | Screw M6*12 | 801-460120-14 | 2 |
| 24 | Platen Roller | 702-000800-XX | 1 |
| 27 | Bearing | 710-033200-XX | 2 |
| 28 | Print Head Lever | 700-030900-XX | 1 |
| 29 | TPH Lever Spring | 712-027500-XX | 1 |
| 30 | Metal Washer 8.2 | 851-821615-XX | 1 |
| 31 | E Ring 6 | 855-601208-XX | 3 |
| 36 | Flat Head Screw M3*6 | 801-230602-11 | 3 |
| 37 | Tear Off Bar | 710-029800-XX | 1 |
| 38 | Flat Head Screw 3*4.5 | 710-029800-XX | 2 |
| 53 | Washer | 860-821205-XX | 1 |

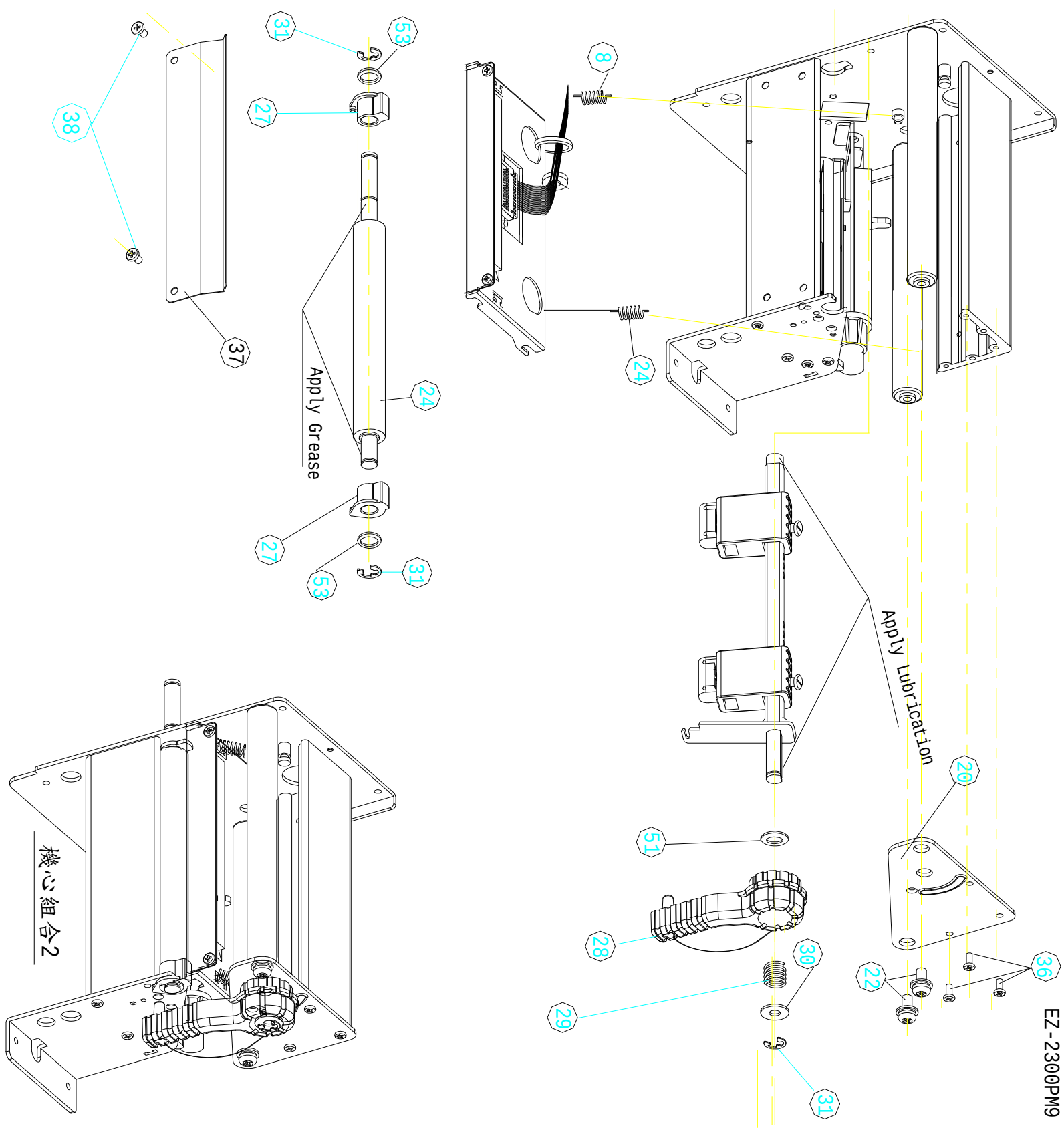

(L)

| NO | Description | Part No. | Qty. |
|---|---|---|---|
| 1 | Base Plate | 710-029300-XX | 1 |
| 2 | Rubber Foot | 703-028400-XX | 4 |
| 3 | Main PCB Ass'y (EZ-2200) | 160-000102-01 | 1 |
| 4 | Middle Wall Plate | 710-029400-XX | 1 |
| 8 | Paper Roll Plate | 710-028800-XX | 1 |
| 29 | Ribbon Out PCB | 160-000106-XX | 1 |
| 32 | Screw M4*10 | 801-440100-14 | 4 |
| 33 | Flat Head Screw M3*4.5 | 801-230452-11 | 9 |
| 34 | Screw M3*10 | 840-000002-XX | 1 |
| 45 | Washer | 858-400805-XX | 1 |
| 48 | Rewinder Wall Plate | 710-034100-XX | 1 |
| 49 | Screw M3*6+SW | 801-430060-15 | 5 |
| | Main PCB Ass'y (EZ-2300) | 200-000102-10 | 1 |
| | Screw | 703-027500-XX | 2 |

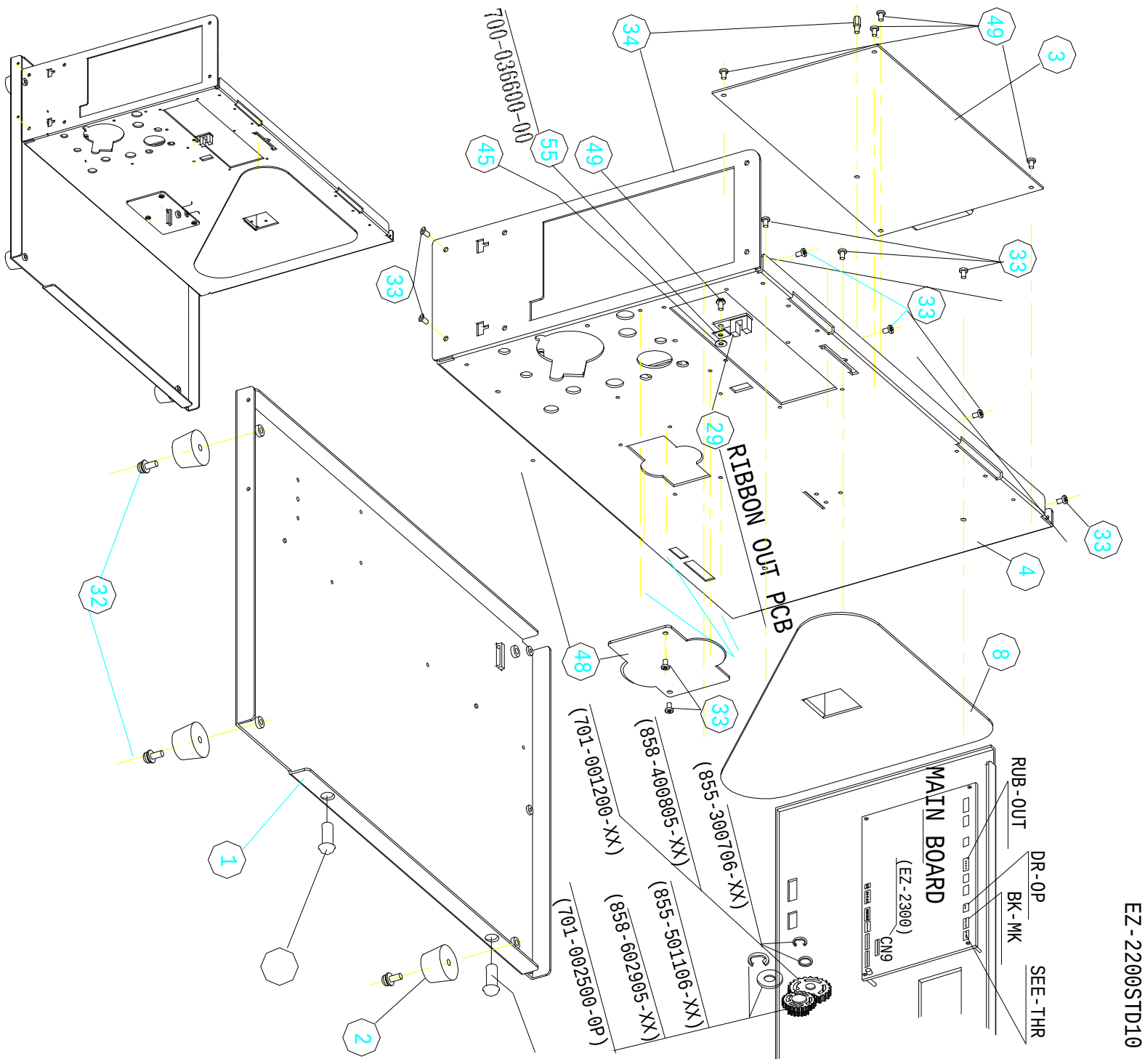

(M)

| NO | Description | Part No. | Qty. |
|---|---|---|---|
| 14 | Back Cover | 710-029500-XX | 1 |
| 15 | Power Switch Ass'y | 142-000016-XX | 1 |
| 17 | RS232 | 601-000021-XX | 1 |
| 33 | Flat Head Screw M3*4.5 | 801-230452-11 | 14 |
| A31 | E Ring 6 | 855-601208-XX | 1 |
| A40 | 30 Tooth Gear | 701-001700-XX | 1 |
| A41 | 44 Tooth Gear (EZ-2200) | 701-001600-XX | 1 |
| | 65 Tooth Gear (EZ-2300) | 701-002800-XX | 1 |
| 63 | Connector 2 Pin/Rewinder | 601-020023-XX | 1 |
| 64 | Connector 5Pin/Cutter | 601-050019-XX | 1 |
| | Mech. Ass'y | | 1 |
| | Middle Wall Plate Ass'y | | |

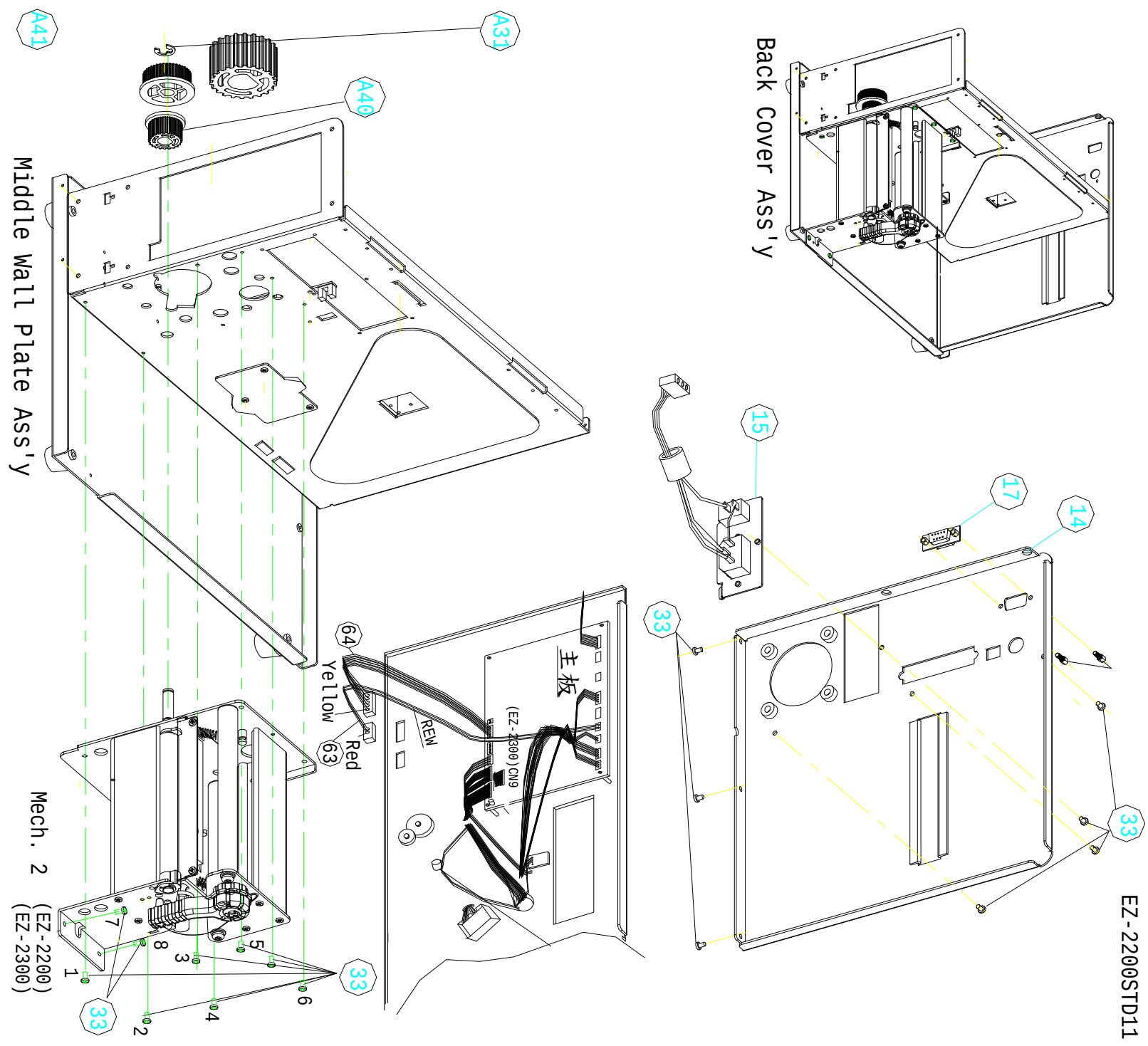


EZ-2200STD11

(N)

| NO | Description | Part No. | Qty. |
|---|---|---|---|
| 40 | Idel Poly | 701-001900-XX | 1 |
| 41 | Poly Core | 711-029200-XX | 1 |
| 42 | Poly Bracket | 710-028300-XX | 1 |
| 51 | E Ring 4 | 855-400906-XX | 2 |

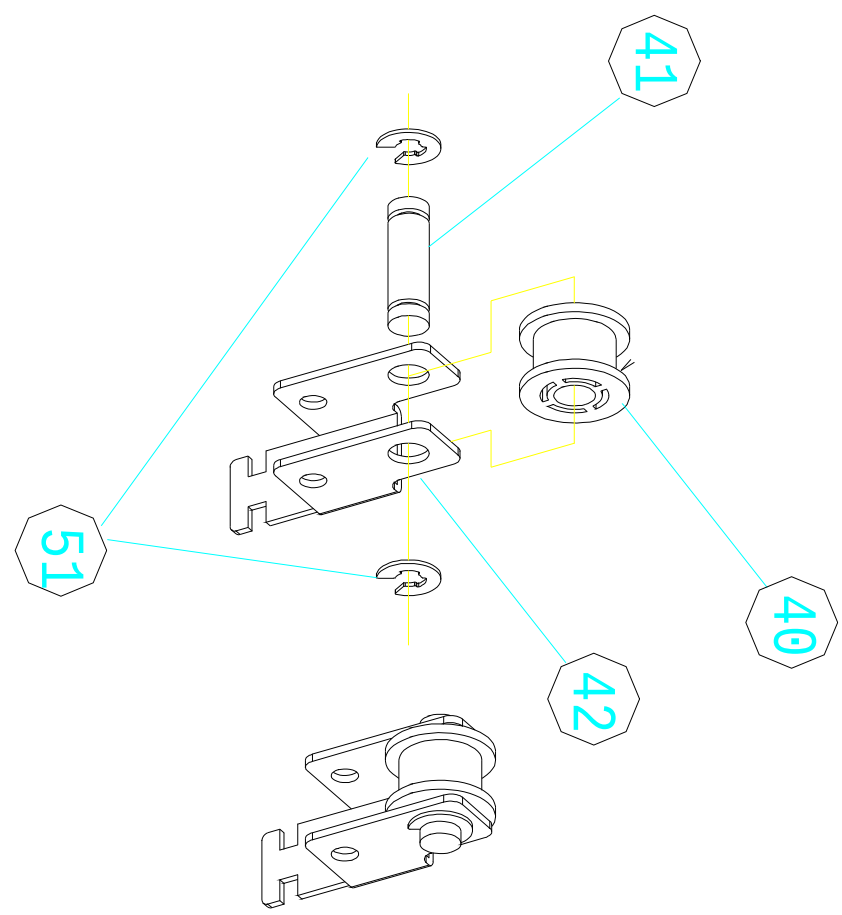


EZ-2200STD12

Date 2003/10/8

Revision A

Doc. No. 730-013300-00

EZ-2200STD13

| NO | Description | Part No. | Qty. |
|---|---|---|---|
| 18 | 22T Gear (Double Hub) | 701-001500-XX | 1 |
| 32 | M4*10 | 801-440100-14 | 4 |
| 39 | Stepping Motor | 462-030012-XX | 1 |
| 47 | Motor Bracket | 710-028500-XX | 1 |
| 51 | E Ring 4 | 855-400906-XX | 1 |
| 61 | 22T Gear (Single Hub) | 701-002900-XX | 1 |

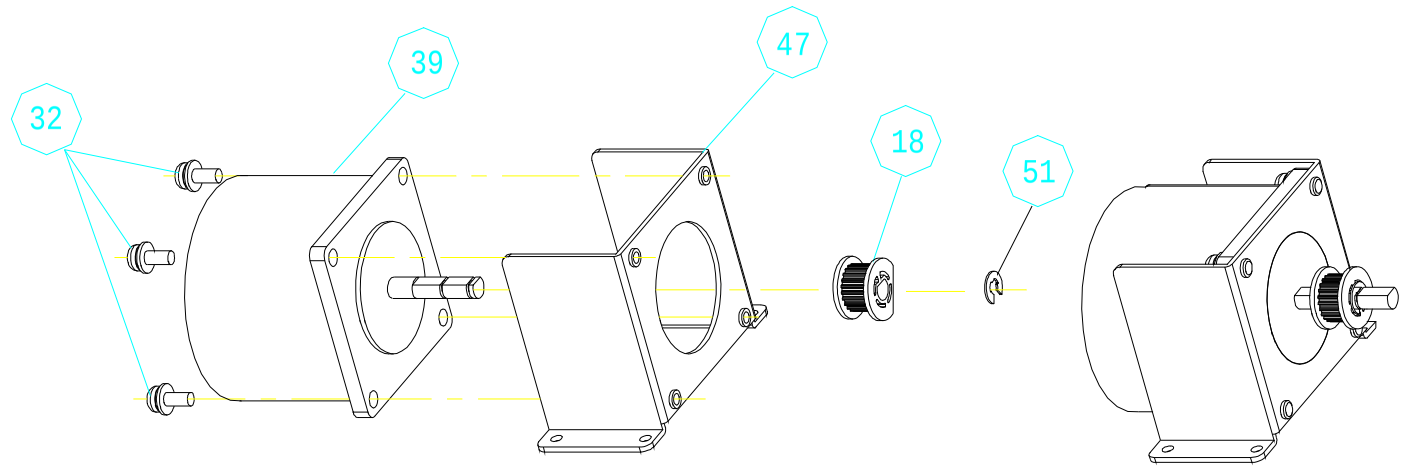


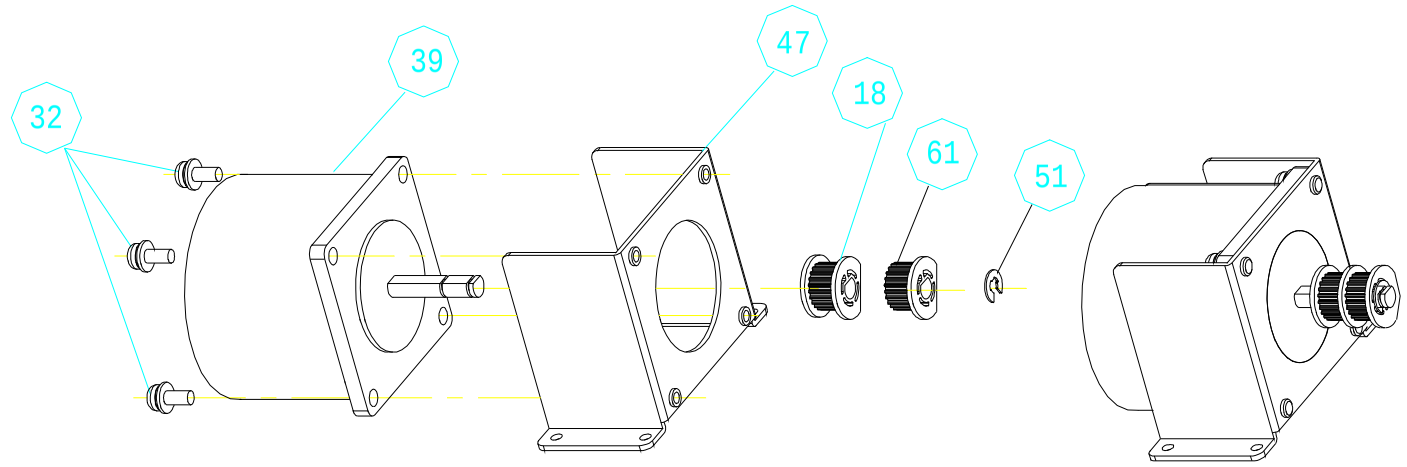


EZ-2200/2300 Motor Ass'y

(O)

(P)

| NO | Description | Part No. | Qty. |
|---|---|---|---|
| 33 | Flat Scrw M3*4.5 | 801-230452-11 | 4 |
| 43 | Idel Poly Spring | 712-027300-XX | 1 |
| 44 | Belt 100MXL(EZ-2200) | 703-027700-00 | 1 |
| 46 | Wire Clip | 703-028800-XX | 1 |
| 50 | E Ring 3 | 855-300706-XX | 1 |
| | Belt 112MXL(EZ-2300) | 703-027700-01 | 1 |
| | Belt 140MXL(EZ-22,2300) | 703-027800-02 | 1 |

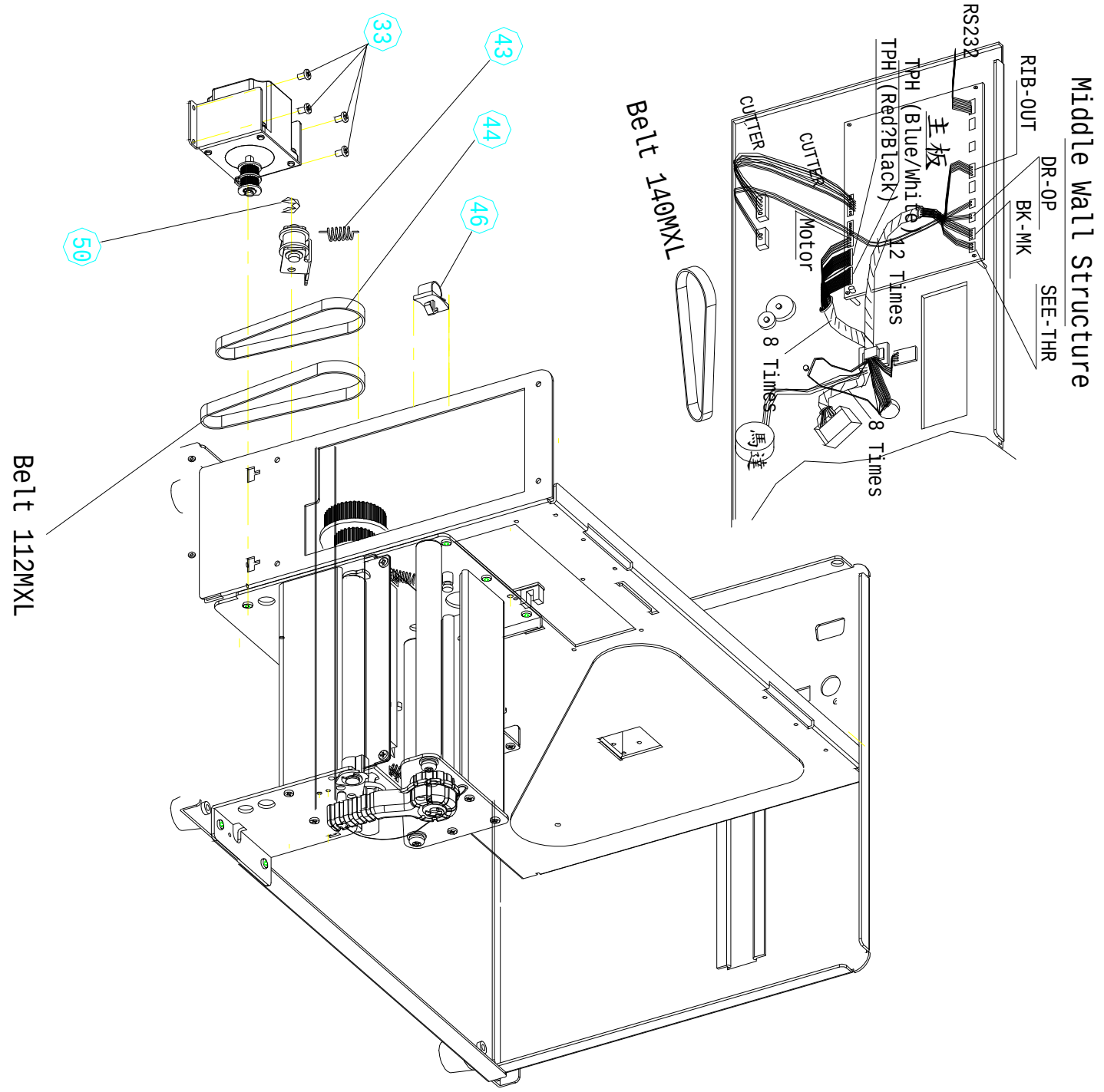


EZ-2200STD14

(Q)

| NO | Description | Part No. | Qty. |
|---|---|---|---|
| 5 | Switching Power | 422-010006-XX | 1 |
| 6 | Power Bracket | 710-028200-XX | 1 |
| 9 | Label Roll Bar | 710-028700-XX | 1 |
| 10 | Label Roll Guide | 700-032000-XX | 1 |
| 11 | Paper Adj. Spring | 712-028200-XX | 1 |
| 16 | Power Cable - Main PCB | 601-060009-XX | 1 |
| 33 | Flat Head Screw M3*4.5 | 801-230452-11 | 9 |
| 36 | Washer 8.2*1.5t | 851-821615-XX | 1 |
| 12 | Screw M4*6 | 801-940060-19 | 1 |
| 56 | Wire Clip 100mm | 703-16600-XX | 1 |

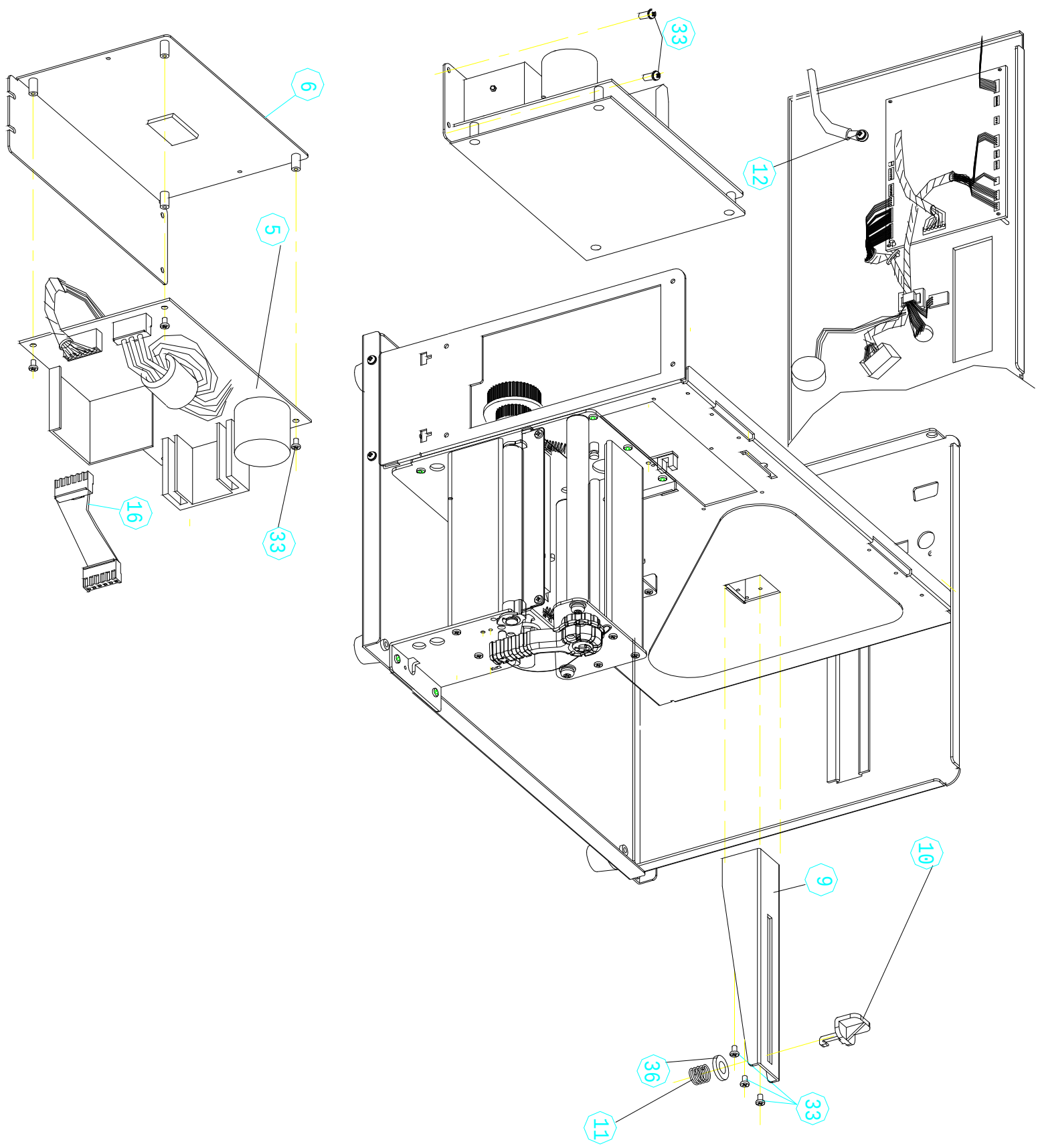


EZ-2200STD15

(R)

| NO | Description | Part No. | Qty. |
|---|---|---|---|
| 13 | Ribbon Position Lever | 700-032200-XX | 1 |
| 28 | LCD Cable - Main PCB | 601-260006-XX | 1 |
| 31 | Black Screw M3*8 | 820-530080-25 | 2 |
| 33 | Flat Head Screw M3.4*5 | 801-230452-11 | 4 |
| 37 | Ribbon Ass'y | 141-000024-XX | 1 |
| 52 | Ribbon Position Spring | 712-028200-XX | 1 |
| 31 | Black Screw 3*8 | 820-530080-25 | 1 |
| | Left Panel Ass'y | | 1 |

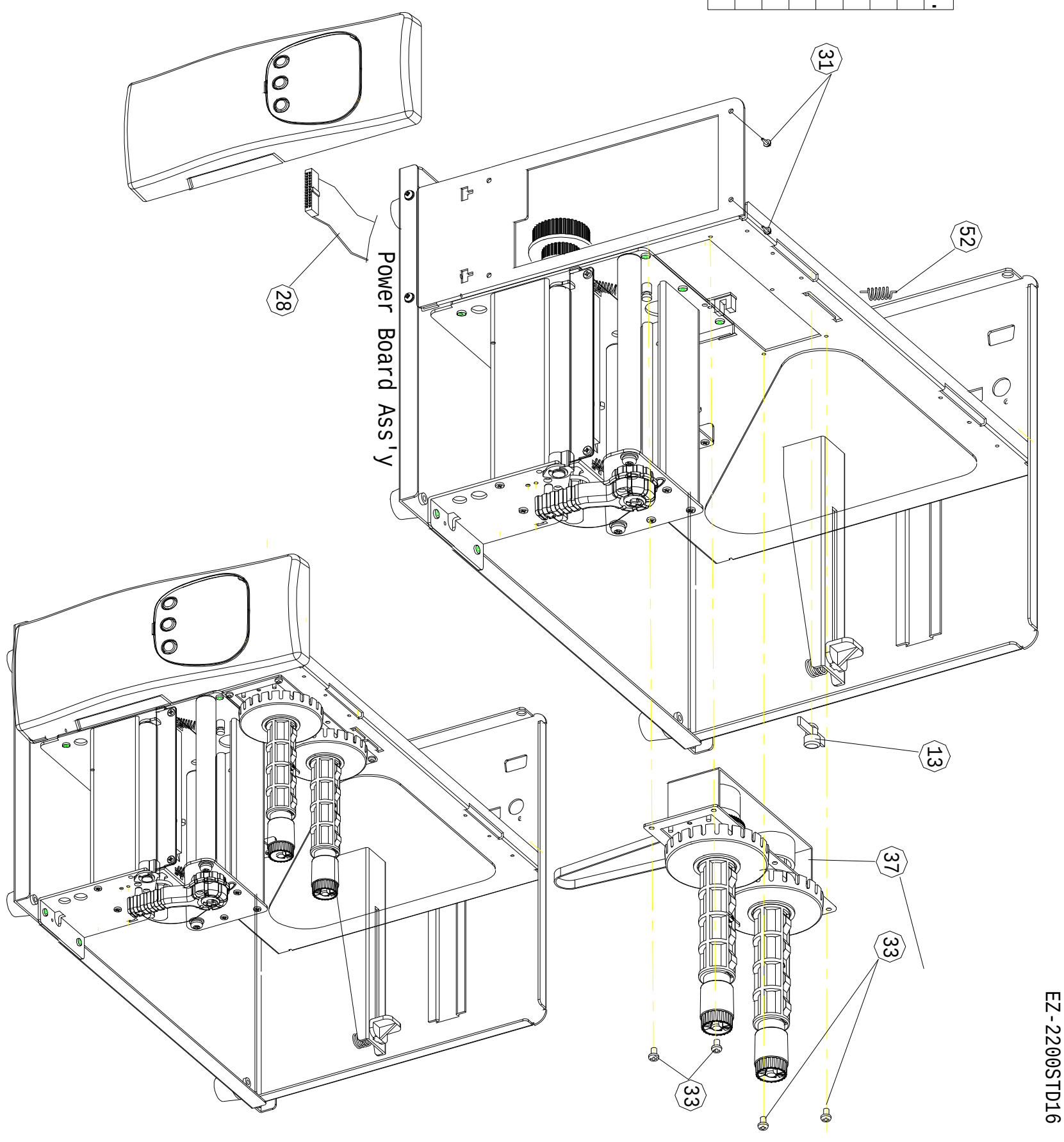


EZ-2200STD16

Date 2003/10/8

Revision A

Doc. No. 730-013300-00

GODEX

(S)

| NO | Description | Part No. | Qty. |
|---|---|---|---|
| 25 | Left Panel | 700-031700-XX | 1 |
| 26 | LCD Panel (EZ-2200/2300) | 700-034700-XX | 1 |
| 26 | | 700-041000-XX | 1 |
| 27 | LCD PCB Ass'y | 160-000103-XX | 1 |
| 28 | LCD Cable - Main PCB | 601-260006-XX | 1 |
| 30 | Adh.Cushion 4.9*1.5 | 700-035500-XX | 4 |
| 53 | | 700-036400-00 | 1 |
| 53 | Stripper Box | 700-036000-XX | 1 |
| 57 | EZ-2200 Strip PCB | 160-000114-XX | 1 |
| 58 | Screw 1.7*5 | 820-417050-15 | 2 |
| 31 | Black Screw 3*8 | 820-430080-15 | 4 |
| 50 | E Ring 3 | 855-300706-XX | 1 |

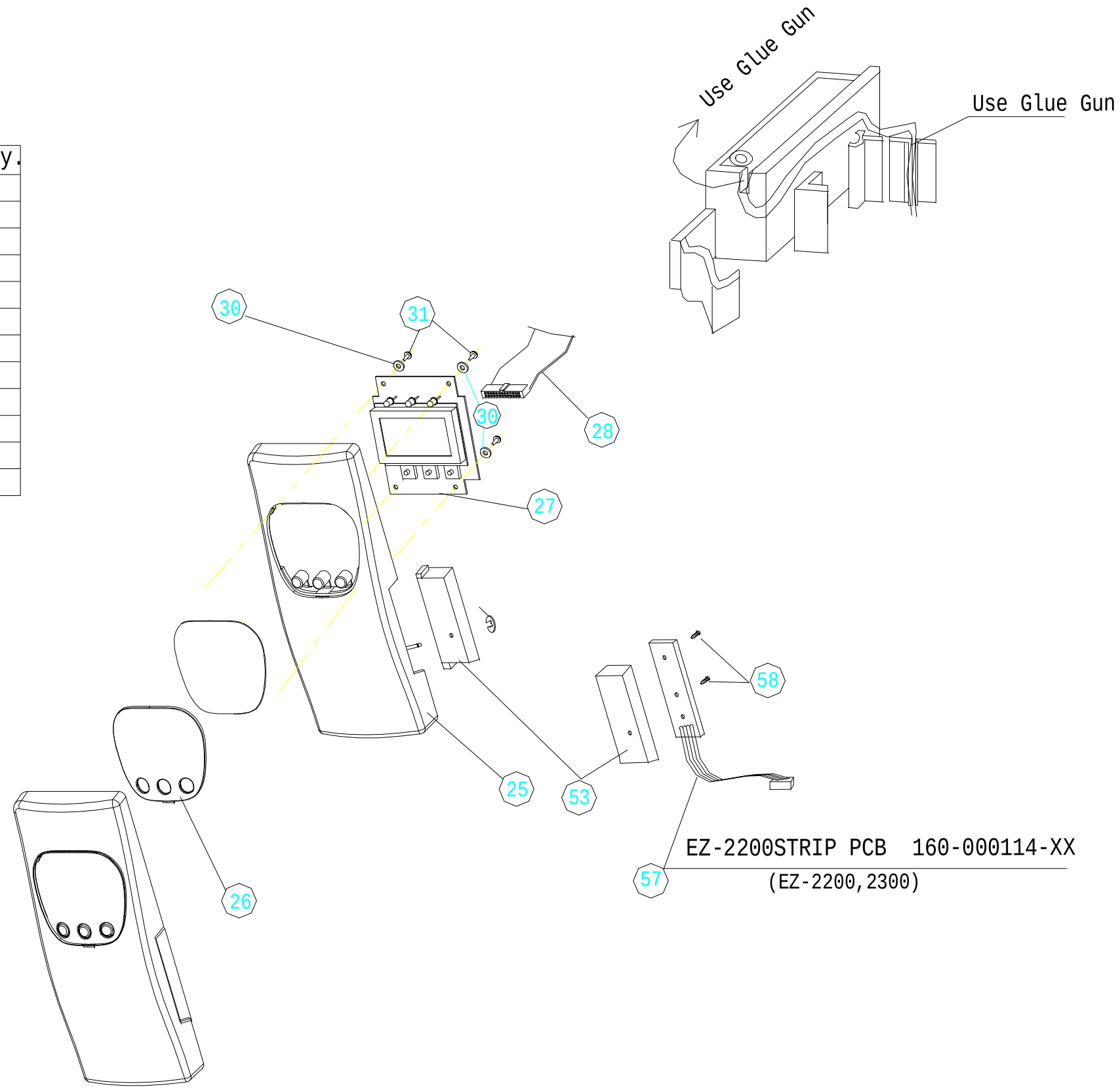

(T)

| NO | Description | Part No. | Qty. |
|---|---|---|---|
| 7 | Left Cover | 710-030200-XX | 1 |
| 20 | Acrylic Plate | 705-001700-XX | 1 |
| 21 | Right Cover | 710-030300-XX | 1 |
| 22 | Logo Plate | 705-001600-XX | 1 |
| 23 | Top Right Panel | 700-031800-XX | 1 |
| 24 | Bottom Right Panel | 700-031600-XX | 1 |
| 35 | Hex. Screw M3*6 | 801-630060-11 | 6 |
| 31 | Black Screw M3*8 | 820-430080-15 | 1 |
| 59 | Hand Screw M4 | 703-029000-XX | 1 |
| 60 | Ribbon Position Label | 801-417050-15 | **1** |
| | | 731-011700-XX | 1 |

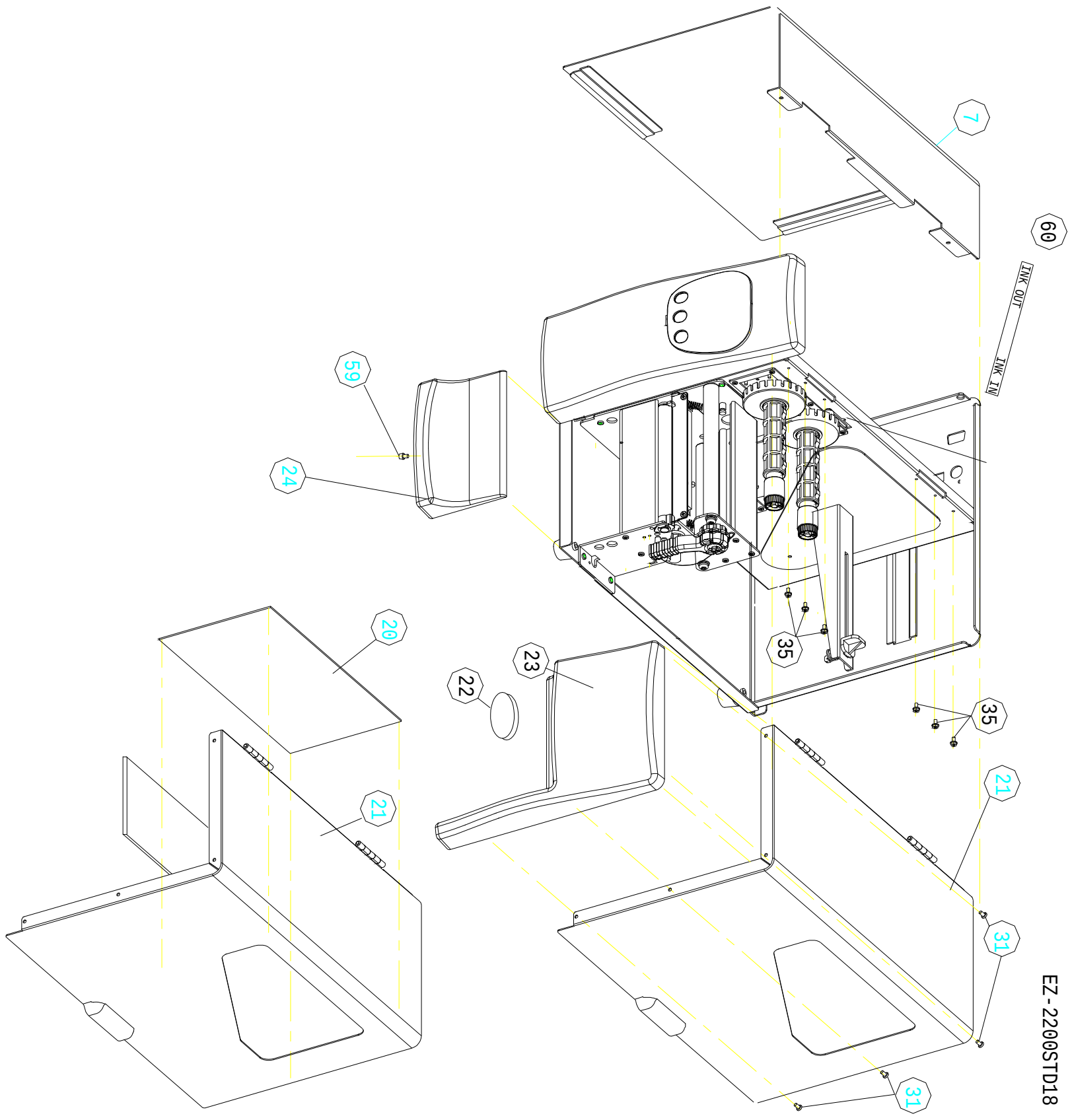


EZ-2200STD18

(U)

| NO | Description | Part No. | Qty. |
|---|---|---|---|
| | Power Cable/120V 18/3C 1830mm | 600-000006-XX | 1 |
| | Roll Core (33*25*110mm) | 700-026300-XX | 1 |
| | Plastic Bag | 740-011400-XX | 1 |
| | Parallel Cable | 600-000001-XX | 1 |
| | GODEX/CD | 742-000800-XX | 1 |
| | PE Box | 740-013400-XX | 1 |
| | Carton | 740-013500-XX | 1 |
| | "CE":LABEL/EZ2200/2300 | 730-012200-XX | 1 |
| | Desiccant | 703-017000-XX | 1 |
| | Carton Label | 731-011601-XX | 1 |
| | Protection Box 661*403*418 | 740-013600-XX | 1 |
| | Accessory Box | 740-013300-XX | 1 |
| | | 111-EZ2100-XX | 1 |
| | Finished Unit (EZ-2200) | 111-EZ2200-XX | 1 |
| | Finished Unit (EZ-2300) | 111-EZ2300-XX | 1 |
| | Semi Glossy Label | a1021025VA-AGA | 1 |
| | Quick Guide | 730-011900-XX | 1 |
| | Ribbon | 8B-110030AW11C | 1 |
| | Power Cable /110V | 600-000034-XX | 1 |

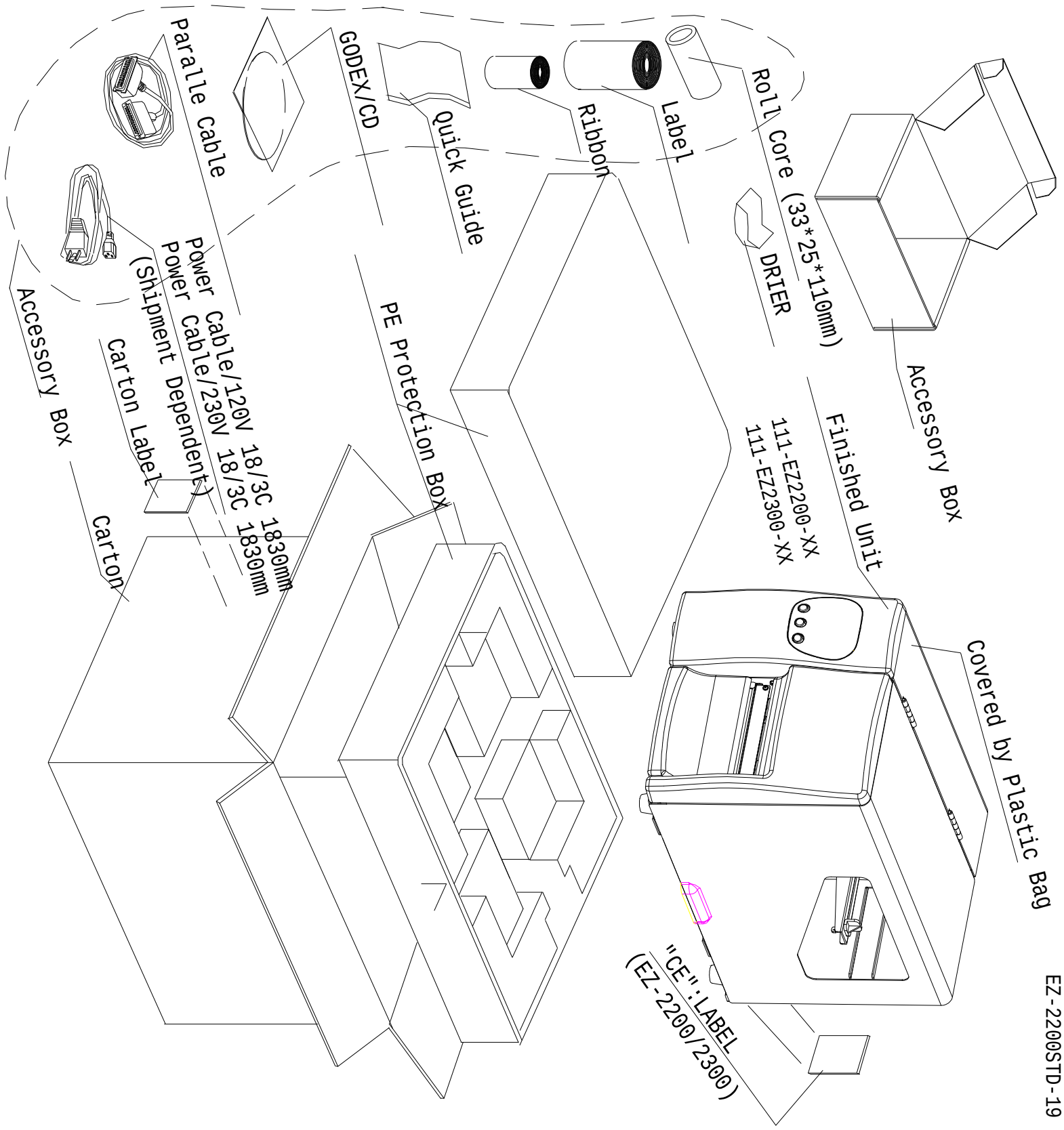

## 3.3 SCHEMATICS

3.3.1 MINA BOARD

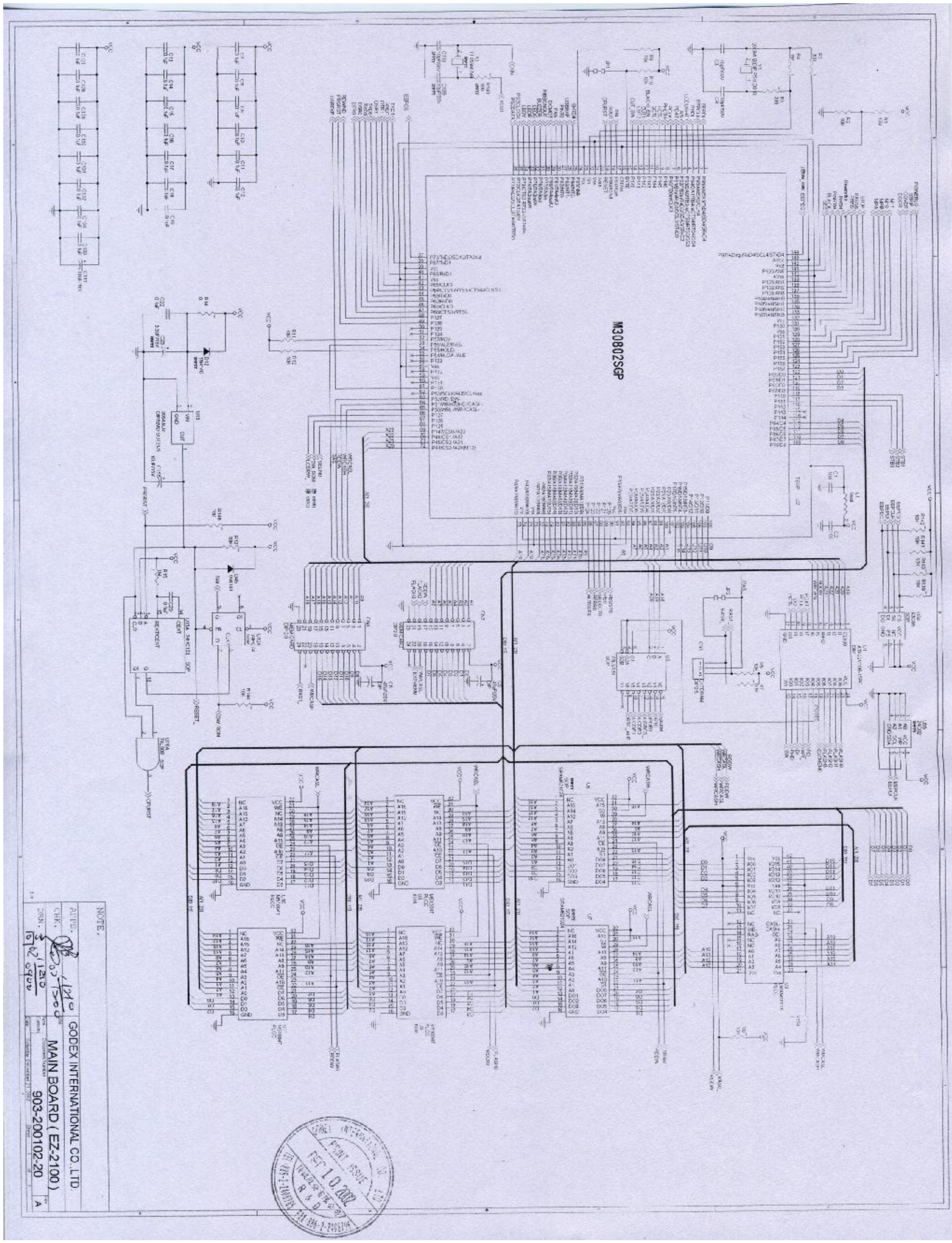

3.3.2 PRINT HEAD

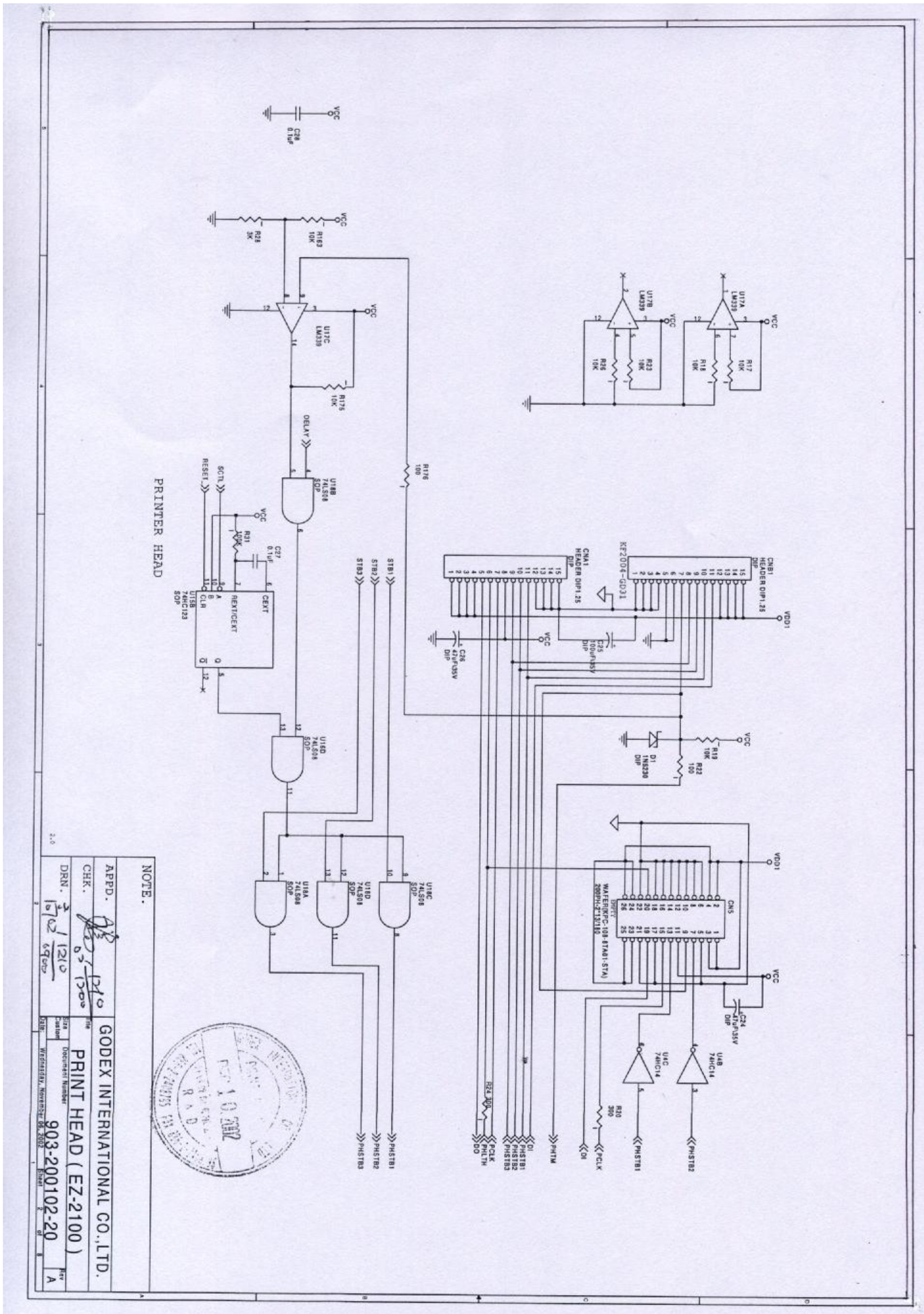

3.3.3 MOTOR

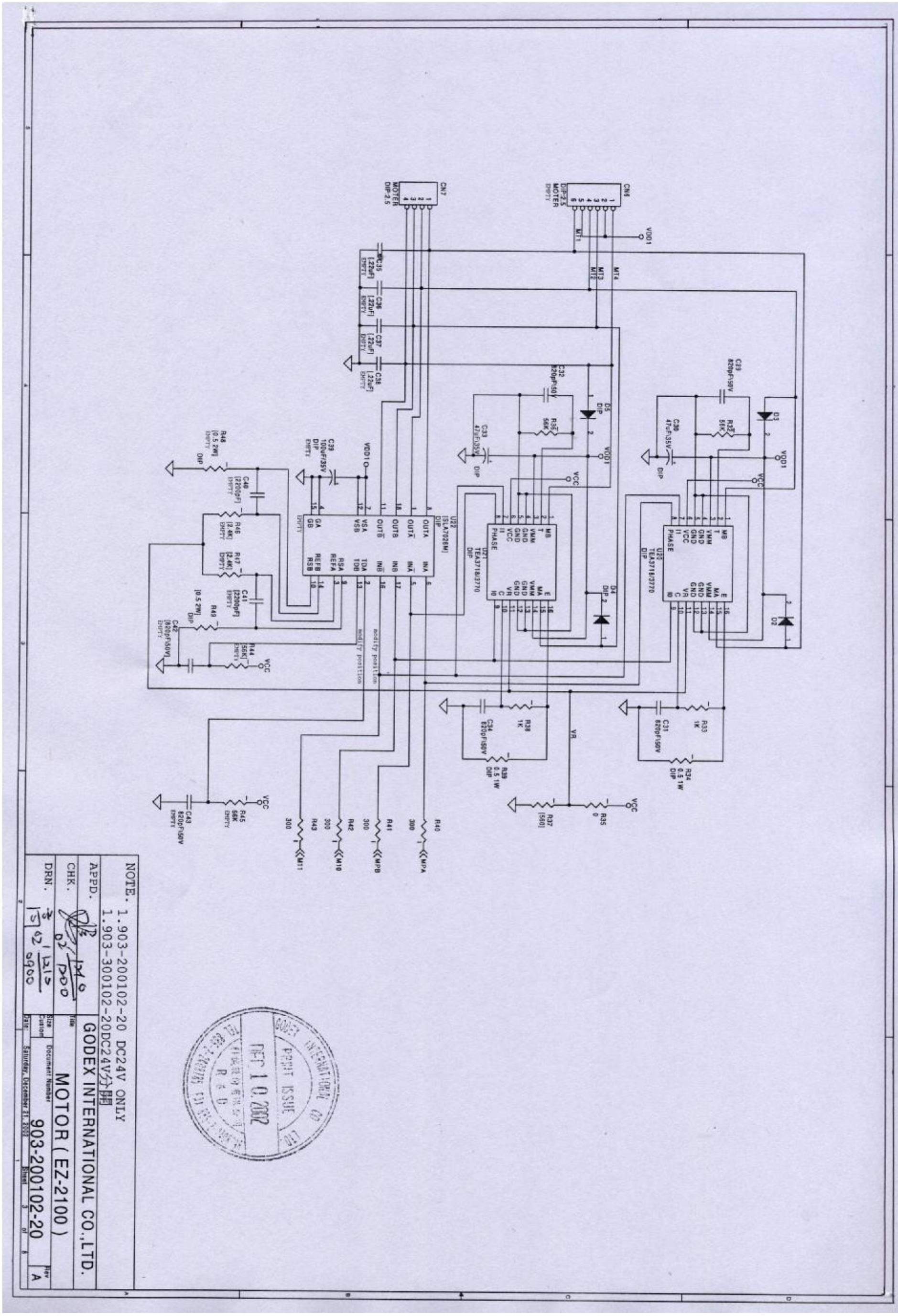
NOTE. 1.903-200102-20 DC24V ONLY
1.903-300102-20DC24V分開
GODEX INTERNATIONAL CO.,LTD.
MOTOR ( EZ-2100 )
903-200102-20
Saturday, December 21, 2002
modify position
DEC 10 2002

3.3.4 CONNECTERS

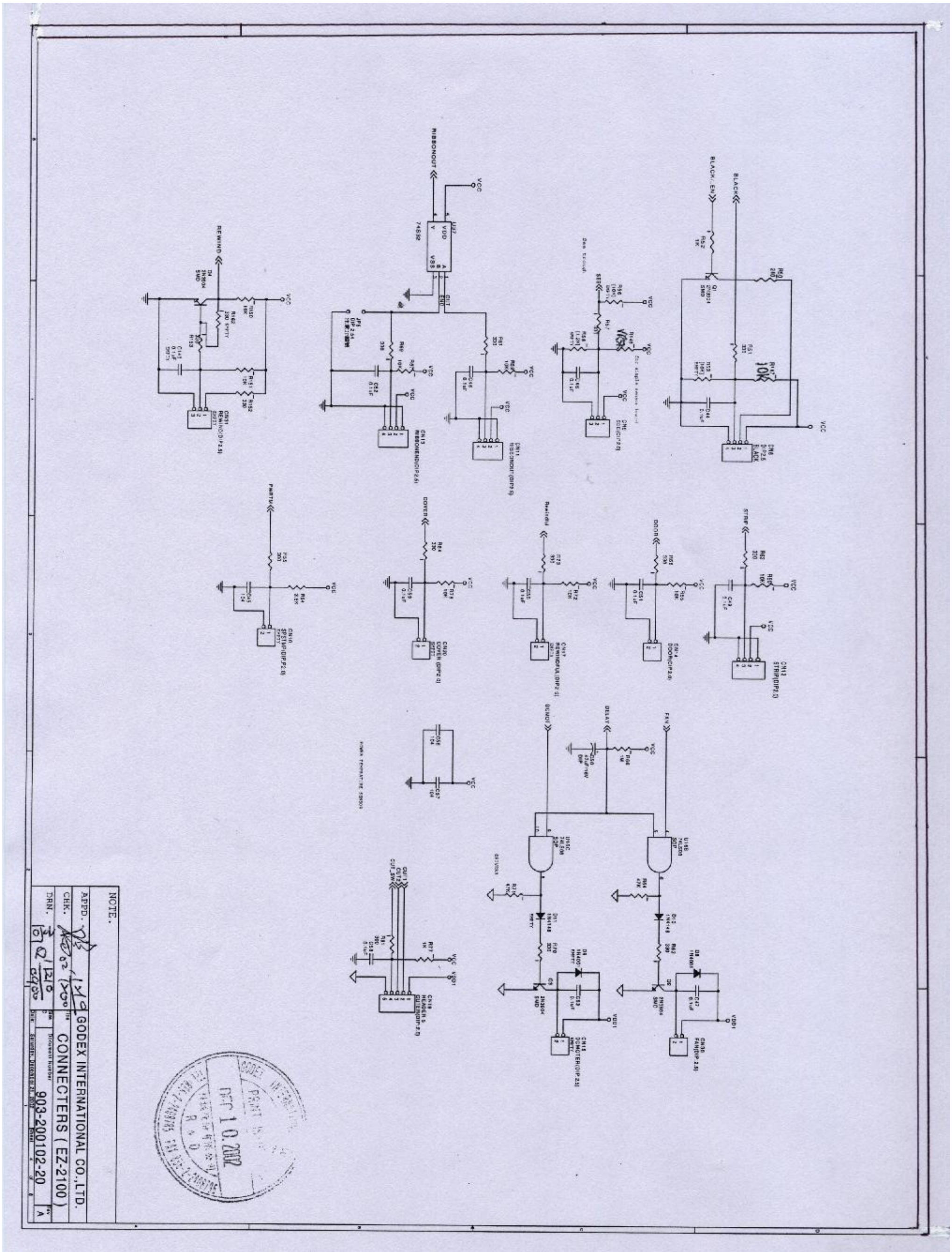

3.3.5 POWER 1

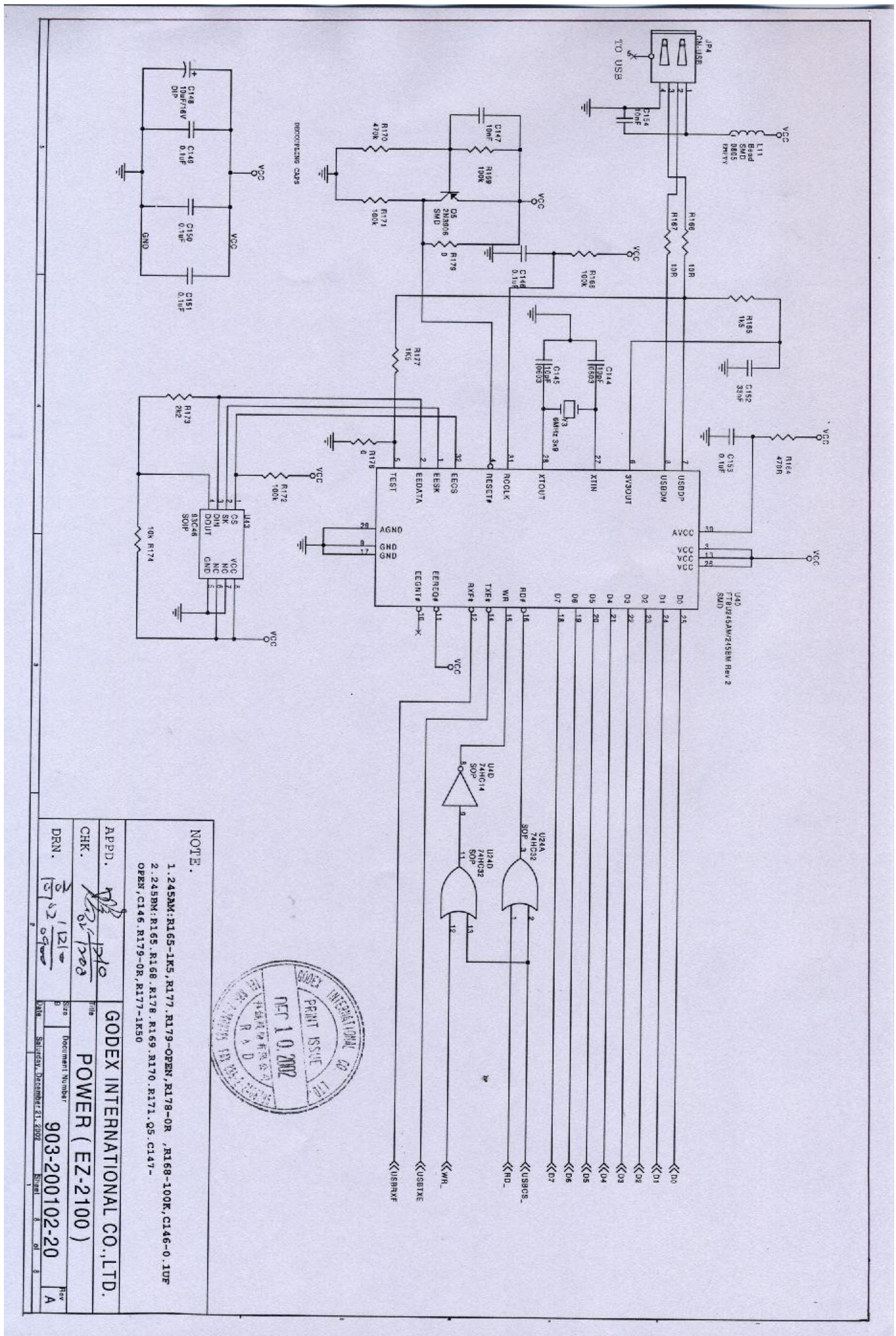
NOTE.
1.245AM:R165-1K5,R177.R179-OPEN,R178-OR ,R168-100K,C146-0.1UF
2.245BM:R165.R168.R178.R169.R170.R171.Q5.C147-
OPEN,C146.R179-OR,R177-1K50
GODEX INTERNATIONAL CO.,LTD.
POWER ( EZ-2100 )
903-200102-20
Saturday, December 21, 2002
PRINT ISSUE
DEC 10 2002

3.3.6 POWER 2

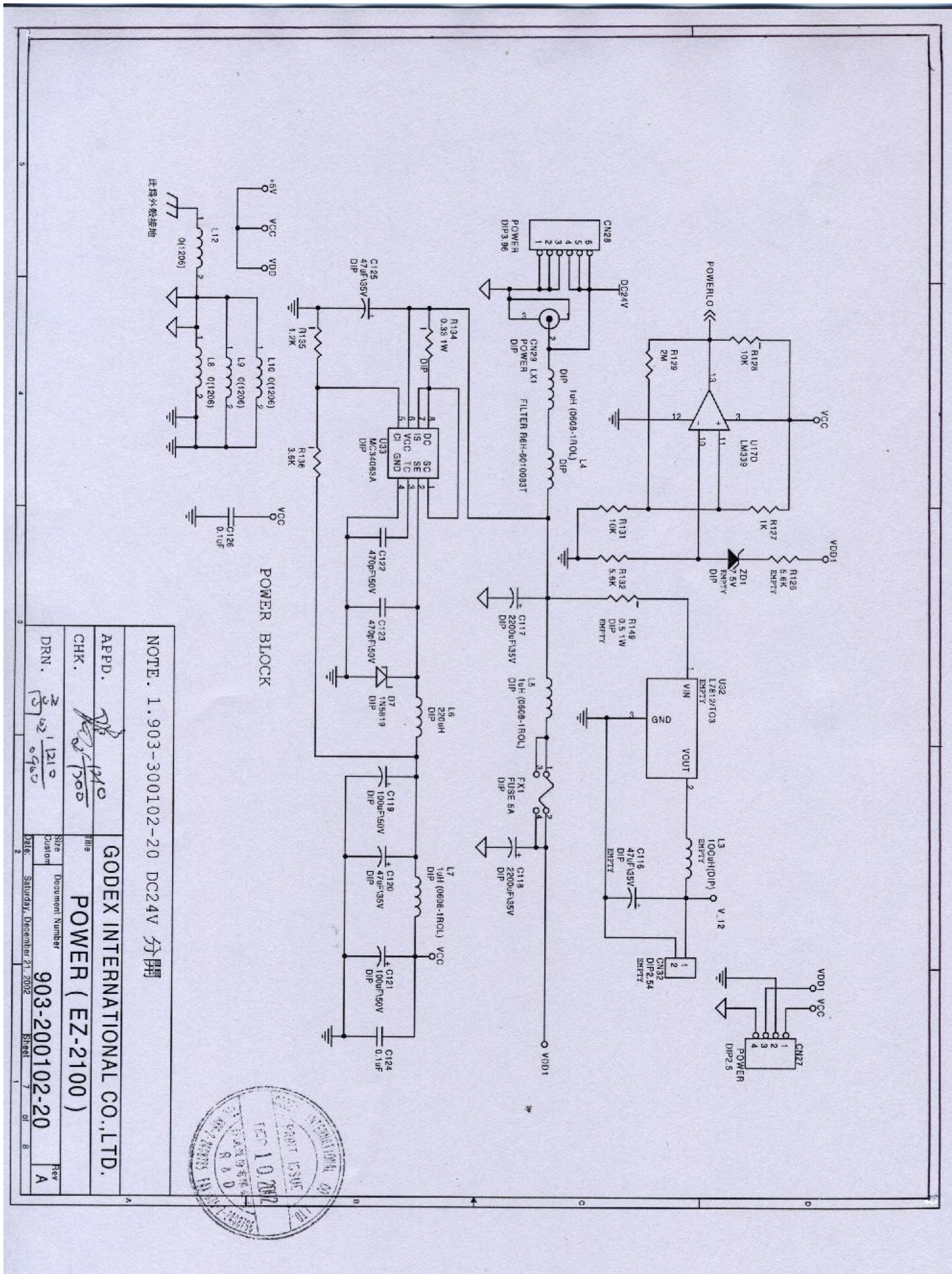
POWER BLOCK
NOTE. 1.903-300102-20 DC24V 分開
GODEX INTERNATIONAL CO.,LTD.
POWER ( EZ-2100 )
903-200102-20
Rev A
Size Custom
Document Number
Title
Date: Saturday, December 21, 2002
Sheet 7 of 8
APPD.
CHK.
DRN.
CN28
POWER DIP3.96
DC24V
CN29 LX1 POWER DIP
FILTER R6H-6010003T
U33 MC34063A DIP
U17D LM339
POWERLO
U32 LX812/TC3 EMPTY
VIN
GND
VOUT
CN27 POWER DIP2.5
CN32 DIP2.54 EMPTY
FX1 FUSE 5A DIP
ZD1 7.5V EMPTY DIP
VCC
VDD1
V_12
+5V
VDD
L12 0(1206)
L10 0(1206)
L9 0(1206)
L8 0(1206)
C125 47uF/35V DIP
R134 0.33 1W DIP
R135 1.2K
R136 3.6K
C126 0.1uF
C122 470pF/50V
C123 470pF/50V
D7 1N5819 DIP
L6 220uH DIP
C119 100uF/50V DIP
C120 47uF/35V DIP
C121 100uF/50V DIP
C124 0.1uF
L7 1uH (0608-1ROL) DIP
C118 2200uF/35V DIP
C117 2200uF/35V DIP
L5 1uH (0608-1ROL) DIP
L4 1uH (0608-1ROL) DIP
L3 100uH(DIP) EMPTY
C116 47uF/35V DIP EMPTY
R149 0.5 1W DIP EMPTY
R131 10K
R132 5.6K
R127 1K
R126 5.6K EMPTY
R128 10K
R129 2M

3.3.7 PORTS 1

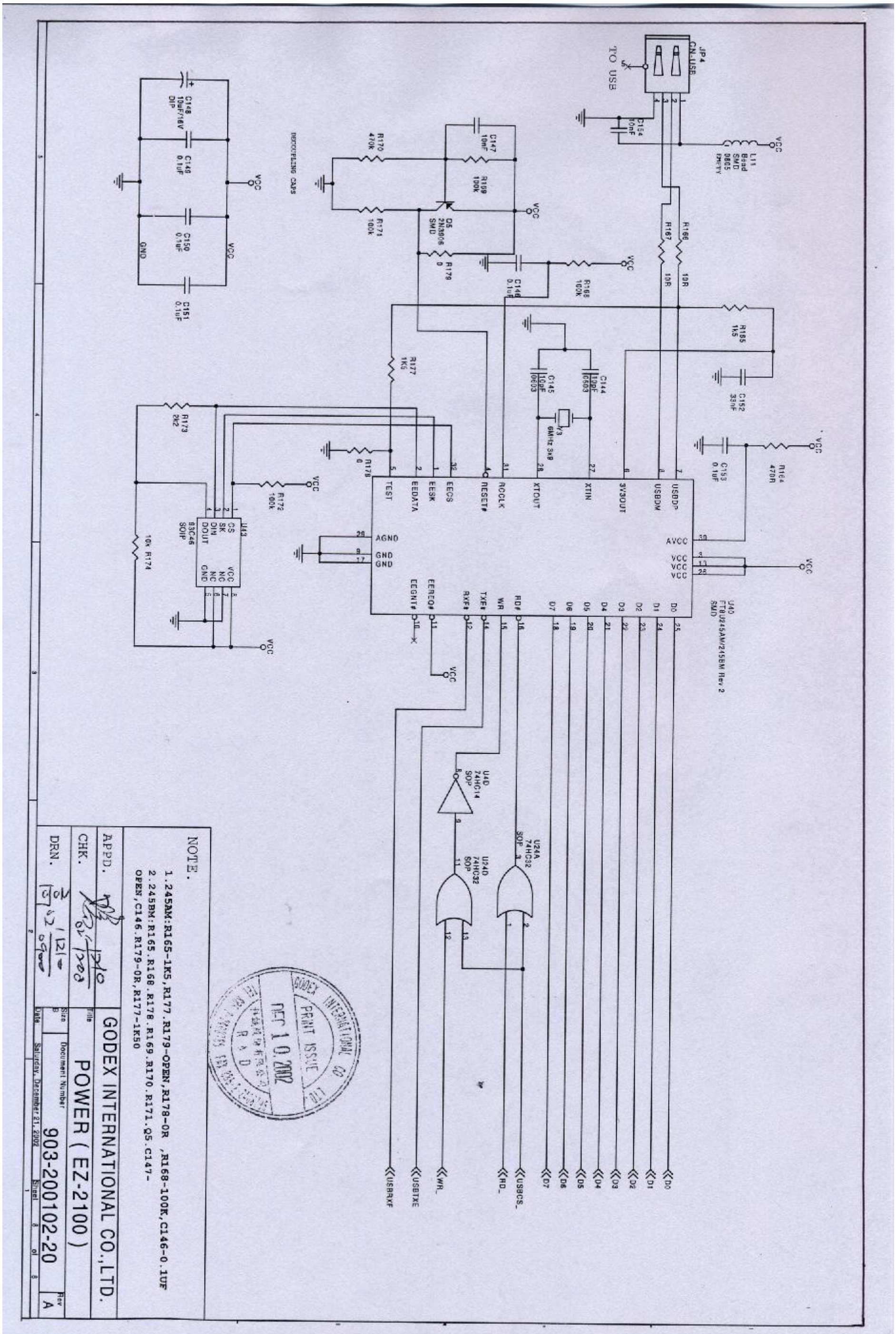
JP4
CN-USB
TO USB
C154
10nF
L11
Bead
SMD
0805
EMPTY
VCC
R166
10R
R167
10R
R165
1K5
C152
33nF
C153
0.1uF
R164
470R
C147
10nF
R159
100K
R170
470K
R171
100K
Q5
2N3906
SMD
R179
0
C148
0.1uF
R168
100K
C144
10pF
0603
C145
10pF
0603
Y3
6MHz 3x8
R177
1K5
R173
2K2
R178
0
R172
100K
R174
10K
U43
93C46
SOIP
CS
SK
DIN
DOUT
VCC
NC
NC
GND
C148
10uF/16V
DIP
C149
0.1uF
C150
0.1uF
C151
0.1uF
DECOUPLING CAPS
U40
FTDI245AM/245BM Rev 2
SMD
TEST
EEDATA
EESK
EECS
RESET#
RCLK
XTOUT
XTIN
3V3OUT
USBDM
USBDP
AVCC
AGND
GND
EEREQ#
EEGNT#
RXF#
TXE#
WR
RD#
D7
D6
D5
D4
D3
D2
D1
D0
U24A
74HC32
SOP
U24D
74HC32
SOP
U40
74HC14
SOP
D0
D1
D2
D3
D4
D5
D6
D7
USBCS_
RD_
WR_
USBTXE
USBRXF
NOTE.
1.245AM:R165-1K5,R177.R179-OPEN,R178-0R ,R168-100K,C146-0.1UF
2.245BM:R165.R168.R178.R169.R170.R171.Q5.C147-
OPEN,C146.R179-0R,R177-1K50
APPD.
CHK.
DRN.
GODEX INTERNATIONAL CO.,LTD.
Title
POWER ( EZ-2100 )
Size
B
Document Number
903-200102-20
Rev
A
Date
Saturday, December 21, 2002
Sheet
8
of
8
GODEX INTERNATIONAL CO.
PRINT ISSUE
DEC 10 2002
R & D

3.3.8 PORTS 2

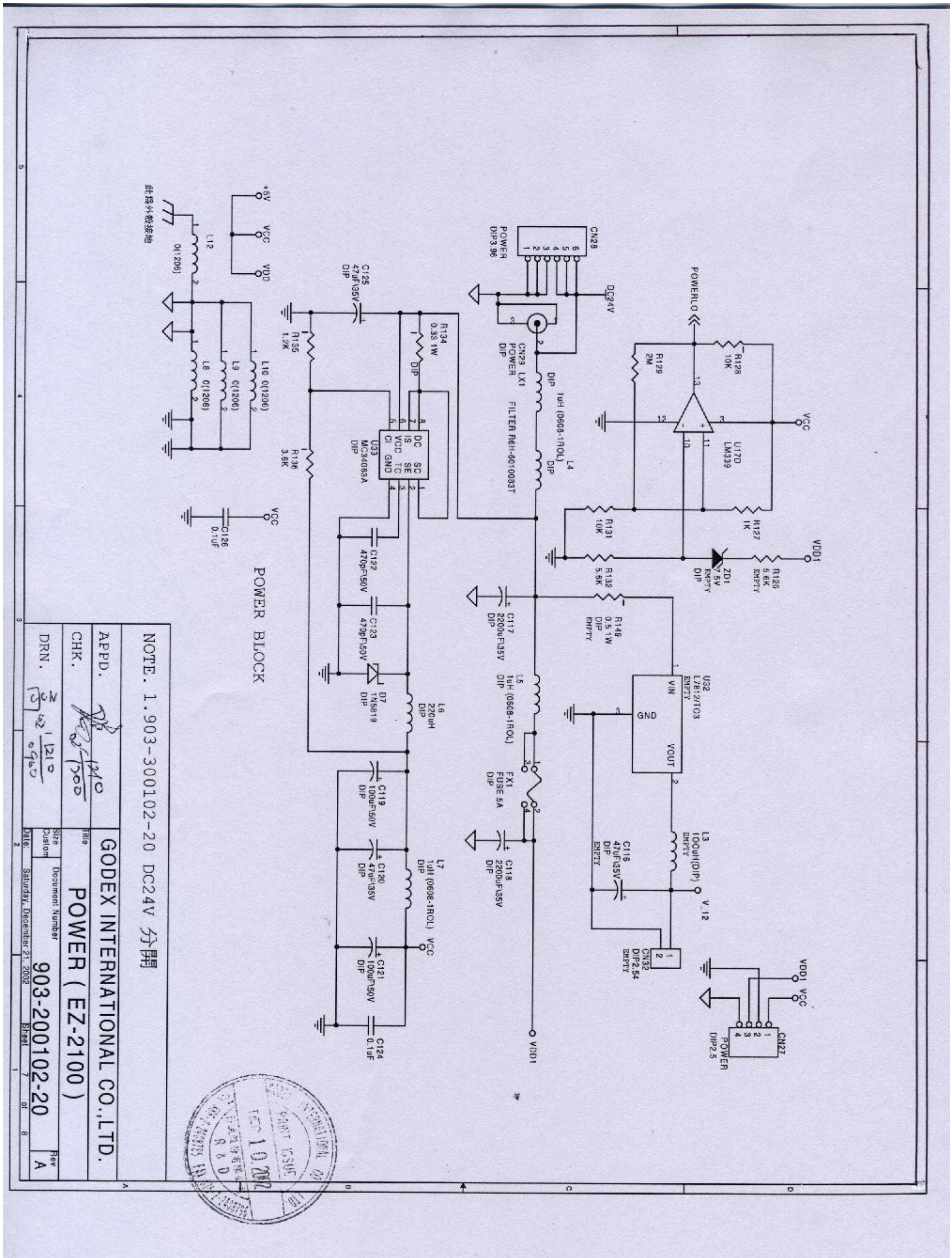
POWER BLOCK
NOTE. 1.903-300102-20 DC24V 分開
GODEX INTERNATIONAL CO.,LTD.
POWER ( EZ-2100 )
903-200102-20
Saturday, December 21, 2002